ELECTRICAL MACHINES AND APPLIANCES

PRACTICAL

VOCATIONAL EDUCATION

Higher Secondary - First Year

A Publication under
Government of Tamilnadu
Distribution of Free Textbook Programme
(NOT FOR SALE)

Untouchability is a Sin
Untouchability is a Crime
Untouchability is Inhuman

TAMILNADU TEXTBOOK CORPORATION
College Road, Chennai - 600 006.

© Government of Tamilnadu
First Edition - 2010

CHAIRPERSON

Mr. K. GOVINDASAMY
Senior Lecturer / Electrical
Bhakthavatsalam Polytechnic College,
Kanchipuram - 631 552

AUTHORS

Mr. A. Ramesh
Vocational Instructor
Govt. Model Hr. Sec. School
Saidapet, Chennai - 15.

Mr. R. Balamurugan
Vocational Instructor
Govt. Model Hr. Sec. School
Saidapet, Chennai - 15.

Mr. P. Muthusamy
Vocational Instructor
Govt. Boys. Hr. Sec. School
Namakkal South
Namakkal.

Mr. Kasinathan
Vocational Instructor
General Kariappa Hr.
Sec.School
Saligramam,
Chennai - 600 093.

Mr. V.V. Shanmugadoss
Vocational Teacher
Govt. Hr. Sec. School
Perunagar
Kanchipuram - 603 404

This book has been prepared by The Directorate of School Education
on behalf of the Government of Tamilnadu

This book has been printed on 60 GSM Paper

Printed by Offset at:

PREFACE

This book presents simple, explicit and easy for learning at the begining level for the subject on **Engineering Wiring Practical** considerable emphasis is laid on the fundamentals practical wiring, principles and function of various electrical wiring circuits.

The Government of Tamilnadu is deciding to revamp Vocational Education in Higher Secondary Student to make them easy to understand higher studies in engineering faculty.

The Higher Secondary Vocational Students and the beginers on this subject can easily able to understand the Wiring Principles and Concepts. Much care is taken to explain all the details with neat diagram and sketches. All the topics of this book is self illustrative. The students at the begining level will learn this book with much interest themselves, be-cause such care is taken while preparation of this book.

We, my self and my co-authors are profoundly feel proud and happiness in presenting all the need fulfactor in a very simple book form.

I personally thank all for giving me this best opportunity to bring out a best book for benefit of the Vocational Students. All the readers of this book will enrich knowledge on **Engineering Wiring Practical** which makes us feel proud and happy.

Thiru. K. Govindasamy
Chairperson

CONTENT

S.No.	Name of the Exercise	Page No
1.	Study of hand tools for wiring.	1
2.	Study of wiring accessories.	10
3.	Study of types of wiring.	24
4.	One lamp controlled by one switch	35
5.	Two lamps in series connection controlled by one switch.	38
6.	Two lamps in parallel connection controlled by one switch.	41
7.	Stair Case Wiring	44
8.	Wiring two lamp and three pin socket.	47
9.	Connection of one lamp, fan with regulator and three pin socket.	50
10.	Connection of DIM and Bright method using two switch.	53
11.	Connection of bright and bright method using two way switch.	57
12.	Connection of Fluorescent lamp and Testing.	61
13.	Connection of appliances Test Board.	65
14.	Connection diagram Godown Wiring.	67
15.	Extension power card	70
16.	Verification of ohm's law.	72
17.	Verification of Kirchoff's voltage and current law.	74
18.	Measurement of power and power factor in single phase circuit.	77
19.	Calibration of single phase energy meter.	79
20.	Study of Earthing.	82

1. STUDY OF HAND TOOLS FOR WIRING

Cutting Plier

It is made up of forged steel. It is used for cutting, twisting, pulling, holding and gripping small jobs in wiring assembly and repairing work. A non-insulated is also available. Insulated pliers are used for work on live lines.

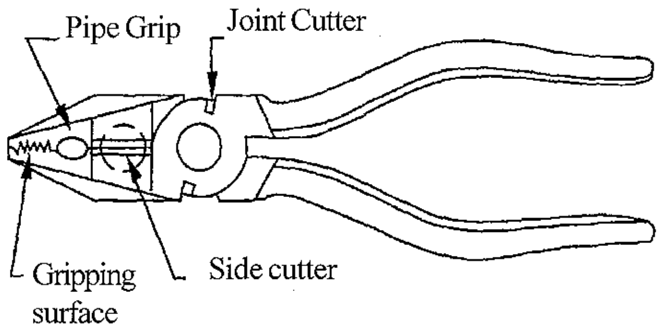

They are specified with their overall dimensions of length in mm. The pliers used for electrical work will be of insulated grip.

Long Nose Plier

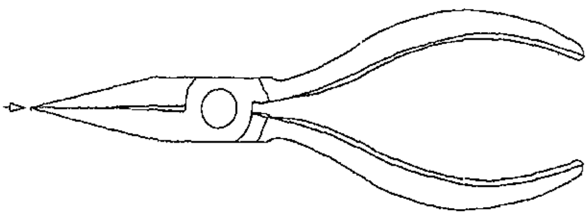

Long nose pliers or ship nose plier with side cutter. Long nose pliers are used for holding small objects in places where fingers cannot reach.

Side cutting plier

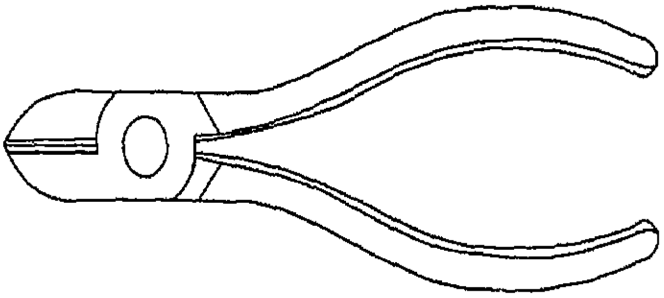

It is used for cutting copper and aluminium wires of smaller diameter (less than 4mm dia).

Round Nose Plier

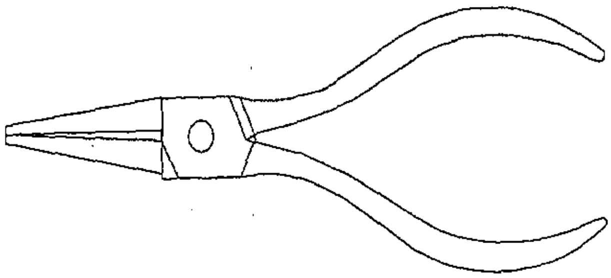

Wire hooks and loops could be made using the round nose pliers.

Care and Maintenance of pliers

i. Do not use pliers as hammers.

ii. Do not use pliers to cut large sized copper or aluminium wires and hard steel wires of any size.

iii. While using the pliers avoid damage to the insulation of hand grips.

iv. Lubricate hinged portions.

Screw Driver

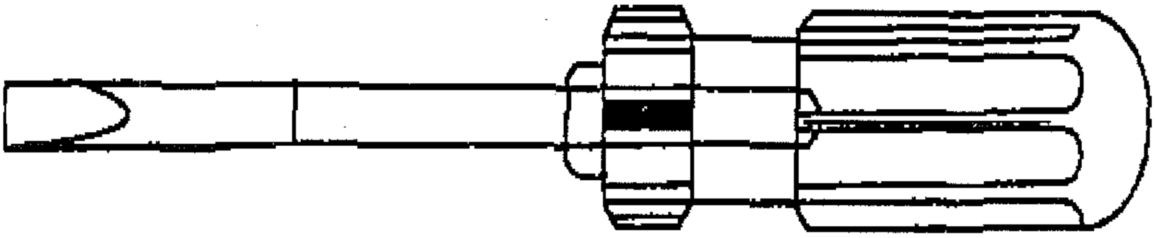

Screw drivers are used for tightening or loosening screws. The screw drivers tip should snugly fit the grooves of the screw to have maximum efficiency and to avoid damage of the screw heads. The screw drivers used for electrical works generally have plastic handles and the stem is covered with insulating sleeves.

As the length of the screw driver is proportional to the turning force, for small work choose a suitable small sized screw driver and vice versa.

Electrician's Knife

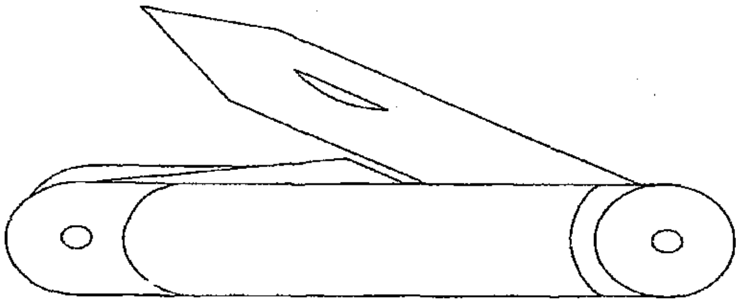

It is used for skinning the insulation of cables and cleaning the wire surface. One of the blades which is sharp is used for skinning the cable and the rough edged blade is used for cleaning the surface of the wires.

Line tester

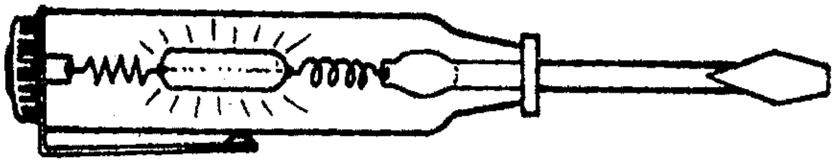

It consists of a glass tube filled with Neon gas and electrodes at the ends. To limit the current within 300 micro-amps at the maximum voltage, a high value resistance is connected in series with one of the electrodes. It may have tip like probe or screw driver at one end. The presence of supply is indicated by the glow of the lamp. When the tip is touched on the live supply and the brass contact in the other end of neon tester is touched by hand.

Ball Pein Hammer

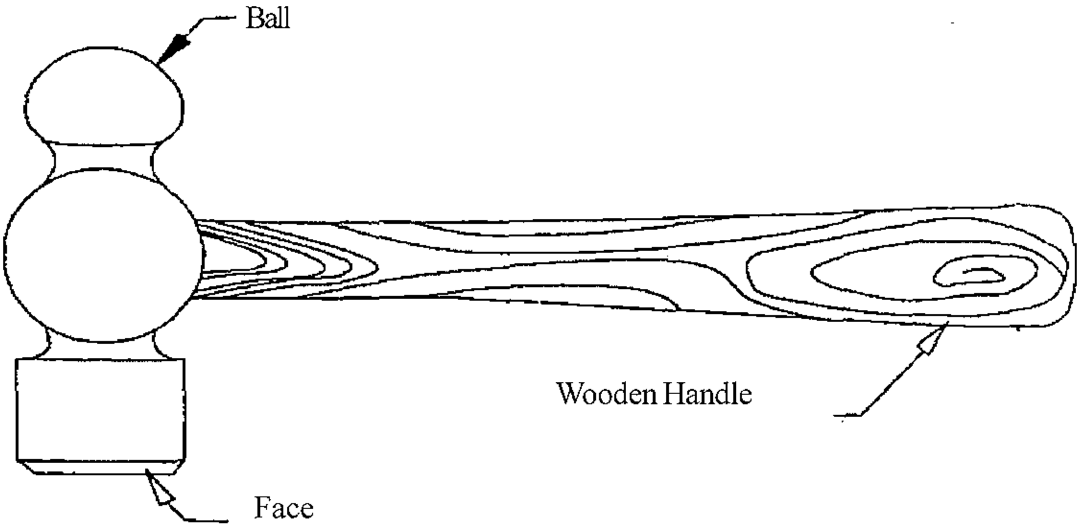

The hammer is made out of special steel and the striking face is tempered. Used for nailing, straightening and bending work. The handle is made of hard wood.

Mallet

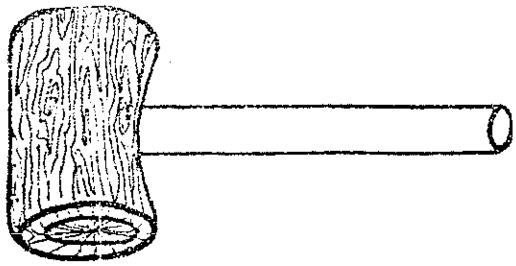

It is made out of hard wood or nylon. It is used for driving the firmer chisel and for straightening and bending of thin metallic sheets. Also it is used in Motor assembly work.

Try Square

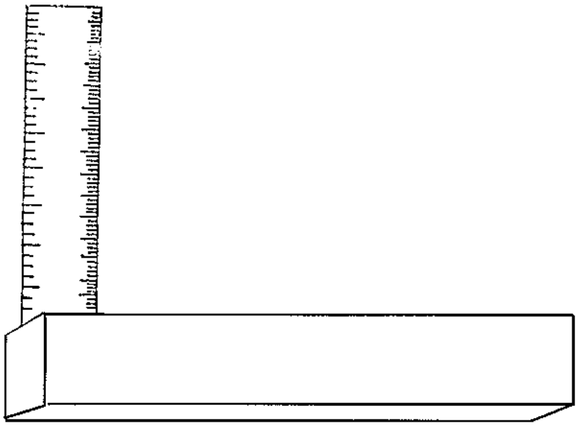

There are two types ; one is the beveled edge with stock and the other is the flat edge without stock. It is used to check whether the object is plane, perpendicular and at right angle. Two straight blades set at right angles to each other constitute the Try Square. The steel blade is riveted to the stock. The stock is made of cast iron. The stock should be set against the edge of the job.

Measuring steel tape

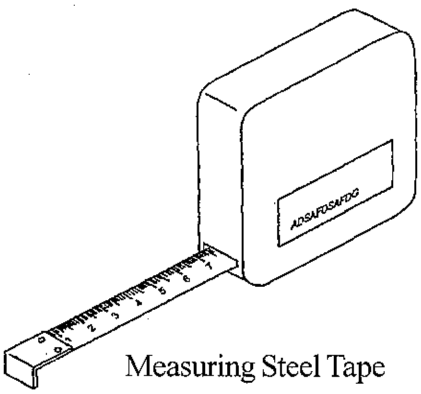

Measuring Steel Tape

The measuring tape is made of thin steel blade, bearing dimensions on it. It is used for measuring the dimension of the wiring installation and general measurements.

Hacksaw

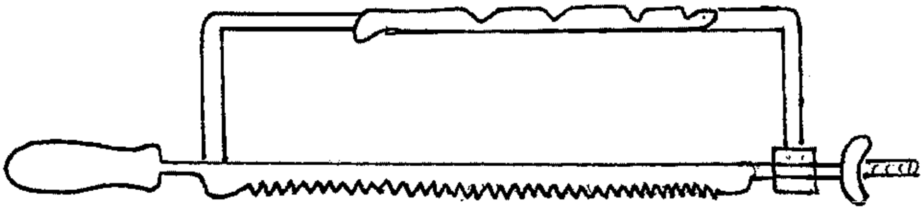

It is made up of sturdy nickel plated steel frame. The frame can be adjusted for 250mm to 300mm blades. It should be fixed on the frame with its teeth pointing away from the handle in order to do the cutting in forward stroke. It is mainly Wood Saw (or) Tenon Saw.

Generally the length of a tenon saw will be 250 or 300 mm and has 8 to 12 teeth per 25.4 mm and the blade width is 10cm. It is used for cutting thin, wooden accessories like wooden batten, casing capping, boards and round blocks.

Pincers

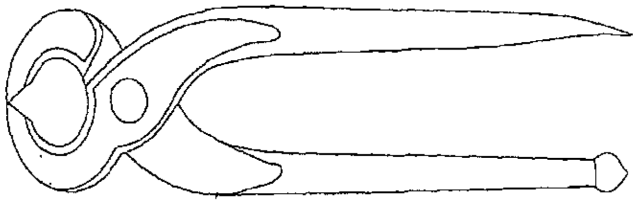

It is used for extracting nails from the wood. The size is given by its length, Eg. 100mm, 150mm, 200mm.

Hand Drill

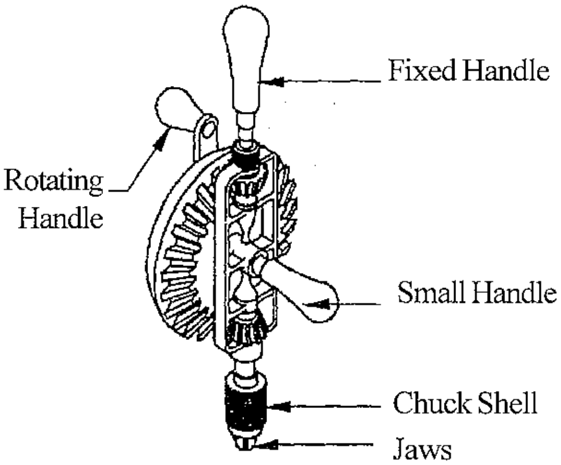

A hand drill machine is used for making holes in thin metal sheets or wooden articles.

Electric Drill

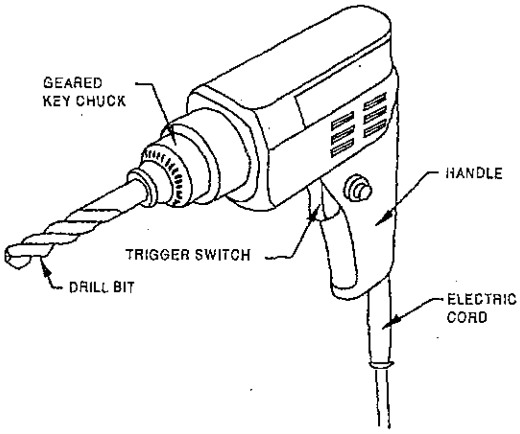

When power is available, a power drilling machine is a more convenient and accurate tool for drilling holes on wooden and metal articles.

Firmer Chisel

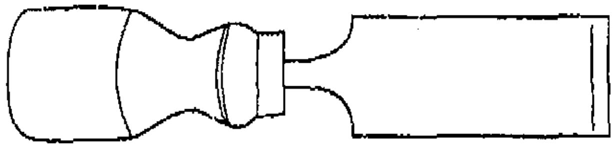

It has a wooden handle and a cast steel blade of 150mm length. Its size is measured according to the width of the blade. Eg. 6mm, 12mm, 18mm, 25mm. It is used for chipping, scrapping and grooving in wood.

Wood Rasp File

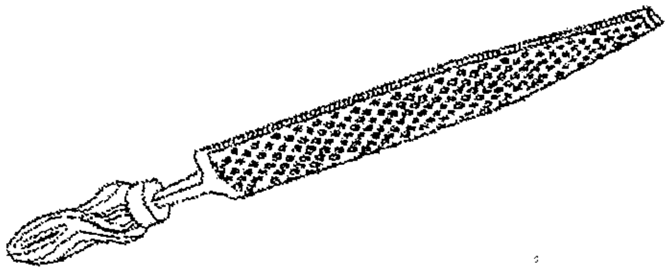

It is used for filling wooden articles where finish is not important. Wood rasp files are of half round shape. They have sharp coarse single cut teeth.

Gimlet

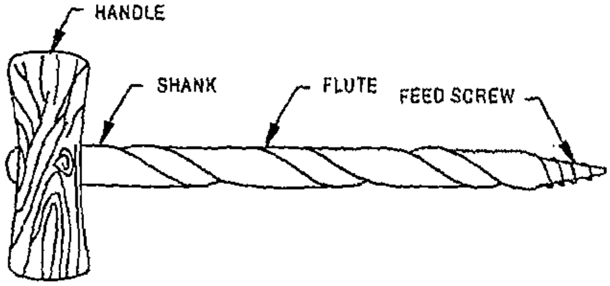

It is used for boring small holes on wooden articles. It has a wooden handle and a boring screwed edge. The size of it depends upon its diameter. Eg. 3mm, 4mm, 5mm, 6mm.

Poker

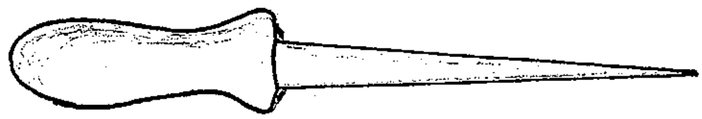

It is a long sharp tool used for making pilot holes on wooden articles to fix screws.

Spanner - Double Ended

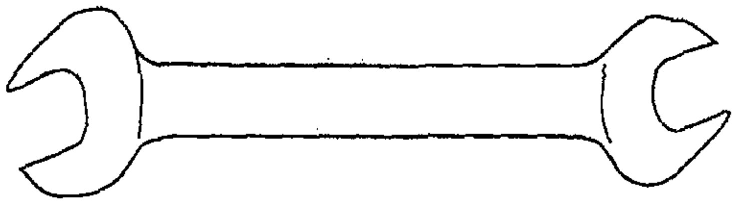

The size of a spanner is indicated so as to fit on the nuts. They are available in many sizes and sharps.

The sizes indicated in double-ended spanners are:

10 – 11 MM

12 – 13 MM

14 – 15 MM

16 – 17 MM

18 – 19 MM

20 – 22 MM

For loosening and tightening of nuts and bolts, spanner sets are used. It is made out of cast steel. They are available in many sizes and may have single or double ends.

Ring Spanner

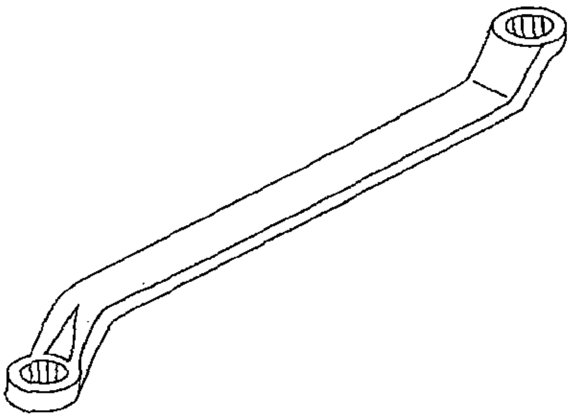

The ring spanner is used in place where the space is restricted and where high leverage is required.

Centre punch

The size is given by its length and diameter of the body. Eg. 100mm x 8mm. The angle of the tip of the centre punch is 90 degree.

It is used for marking and punching pilot holes on metals. It is made of tool steel and the ends are hardened and tempered.

Rawl Jumper

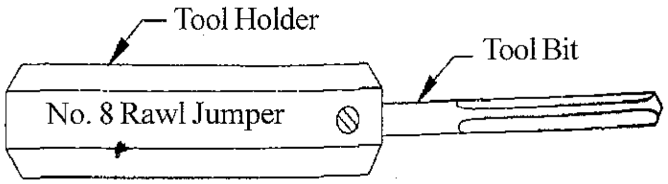

A rawl plug tool has two parts, namely the tool bit and tool holder. The tool bit is made of tool steel and the holder is made of mild steel. It is used for making holes in bricks concrete wall and ceiling. Rawl plugs are inserted in them to fix accessories.

Pipe Jumper

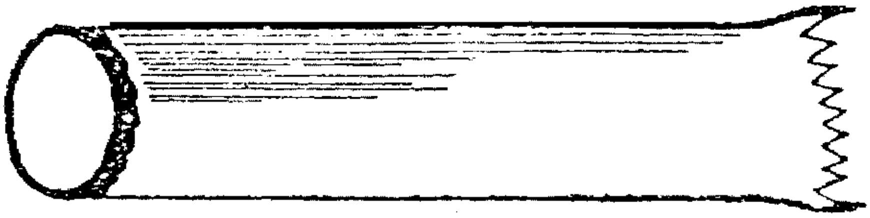

A pipe jumper is used alongwith a hammer to make through holes in walls during wiring. The diameter of the pipe jumper depends upon the diameter of the pipe to be accommodated in the wall, and the length depends upon the wall thickness.

Vice

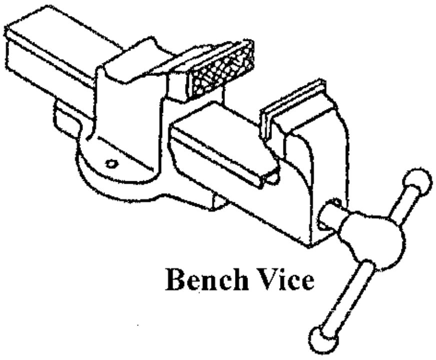

Bench Vice

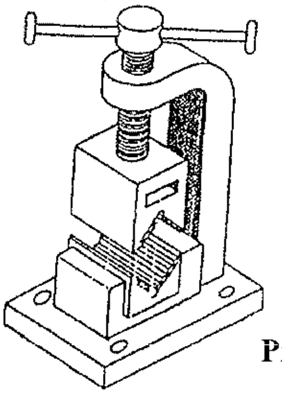

Pipe Vice

Hole the working material in called Vice. Types of vices are Bench vice and Pipe vice.

Soldering Iron

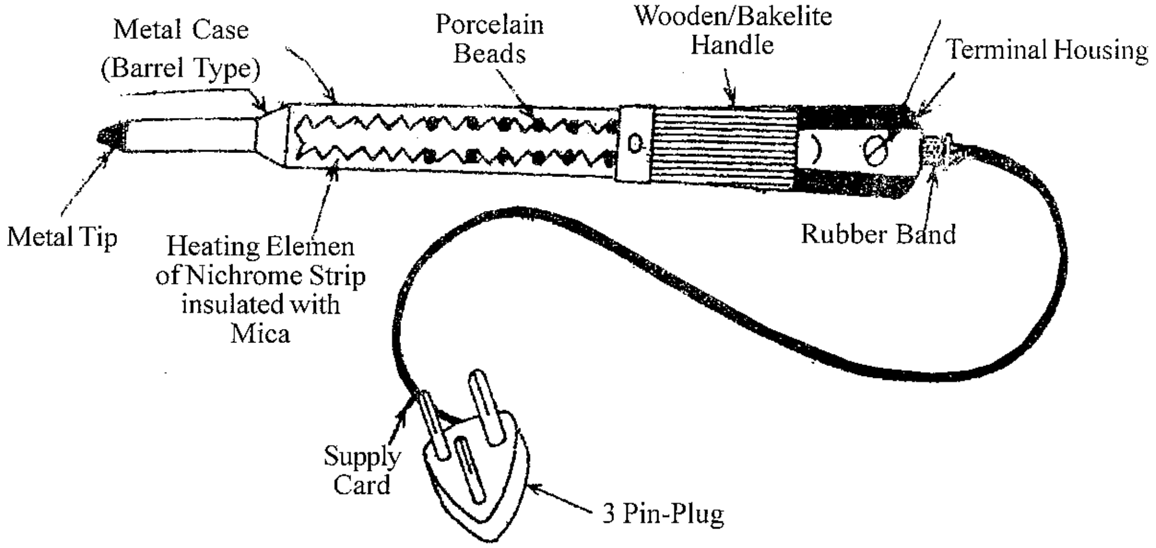

Soldering irons are used for soldering the wire terminals and sheet metal jobs. It consist of a forged piece of copper joined to an iron rod with a wooden handle. It's design depends upon the place of work. It is available from 10 watts to 150 watts.

2. STUDY OF WIRING ACCESSORIES

Electrical accessories

An electrical domestic accessory is a basic part used in wiring either for protection and adjustment or for the control of the electrical circuits or for a combination of these functions.

Rating of accessories

The standard current ratings of the accessories are 6, 16 and 32 amps. The voltage rating is 240 V AC.

The electrical accessories used in wiring installation, are classified according to their uses.

- Controlling accessories
- Holding accessories
- Safety accessories
- Outlet accessories
- General accessories.

Controlling accessories

The accessories which are used to control the circuits or an electrical point like switch are called 'controlling accessories'. All the switches are specified in accordance with their function, place of use, type of mounting, current capacity and working voltage. For eg. S.P.T (Single Pole Tumbler) flush-mounted switch 6 amps 250 volts.

Types of switches according to their function and place of use:

1. Single pole, one-way switch
2. Single pole, two-way switch
3. Intermediate switch
4. Bell-push or push-button switch
5. Pull or ceiling switch
6. Double pole switch (D.P. Switches)
7. Double pole, iron clad (D.P.I.C) switch
8. Three-pole, iron clad (T.P.I.C) switch.

Of the above, 1,2,3,4 and 6 may be either surface mounting type or flush-mounting type.

Single pole, one-way switch

This is a two terminal device, capable of making and breaking a single circuit only. A Knob is provided to make or break the circuit. It is used for controlling light or fan or 6 amps socket circuits. One-way switch is as shown in Fig.

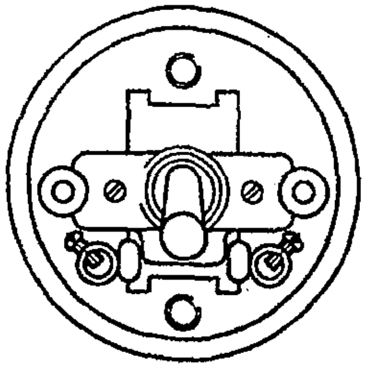

Single pole, two-way switch

This is a three terminal device capable of making or breaking two connections from a single position as shown in Fig. These switches are used in staircase lighting where one lamp is controlled from two places. Though four terminals could be seen, two are short circuited and only three terminals are available for connection.

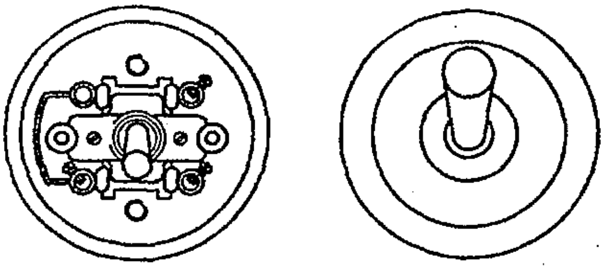

However, both single way and two way switches with their cover look alike as shown in Fig. but can be differentiated by looking at the bottom. Single way switches will have two terminal posts whereas two-way switches will have four terminal posts.

Intermediate switch

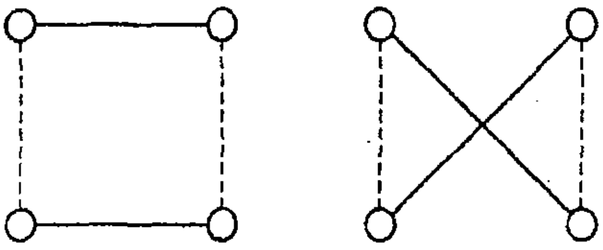

This is a four-terminal device capable of making or breaking two connections from two positions as shown in Fig. This switch is used alongwith 2 way switches to control a lamp from three or more positions.

Bell-push or push-button switch

This is a two-terminal device having a spring-loaded button. When pushed it 'make' the circuit temporarily and attains 'break' position when released.

Pull or ceiling switch (Pendent switch)

This switch shown in Fig. is normally a two-terminal device functioning as a one-way switch to make or break a circuit.

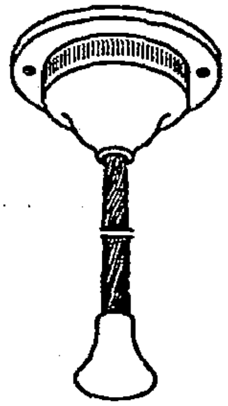

This switch is mounted on ceilings. As the user could operate the switch from a distance through the insulated cord, this could be used safely for operating water heaters in bathrooms or fan or lights in bedrooms.

Double pole switch (D.P. switch)

This is a switch with two poles, the two poles being mechanically coupled together. It is operated with a knob. It is also provided with a fuse and a neutral link. These switches are used as main switches to control main or branch circuits in domestic installation.

Double pole iron-clad main switch

This switch shown in Fig. is also referred to as D.P.I.C switch and is mainly used for single phase domestic installations, to control the main supply. It controls phase and neutral of the supply simultaneously. This switch consists of two fuse-carriers. The one in the phase circuit is wired with the fuse and the other in neutral is linked with a brass plate or thick copper wire. These switches should be earthed properly to safeguard the user. The current rating of the switch varies from 16 amps to 200 amperes.

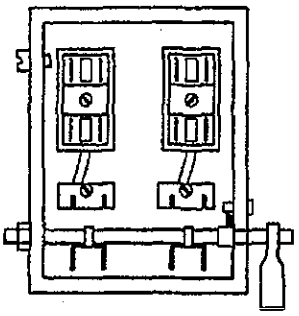

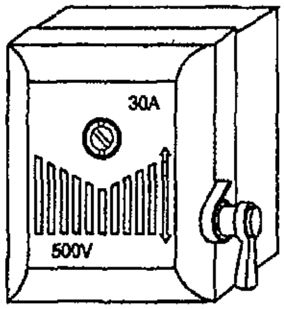

Specification of these switches should have:

- current rating
- voltage rating
- type of enclosure

(sheet steel or cast iron).

Triple (three) pole iron-clad main switch

This is shown in Fig. and is also referred to as TPIC switch and is used in large domestic installation and also in 3-phase power circuits, the switch consists of 3 fuse carriers, one for each phase. Neutral connection is also possible as some switches are provided with a neutral link inside the casing.

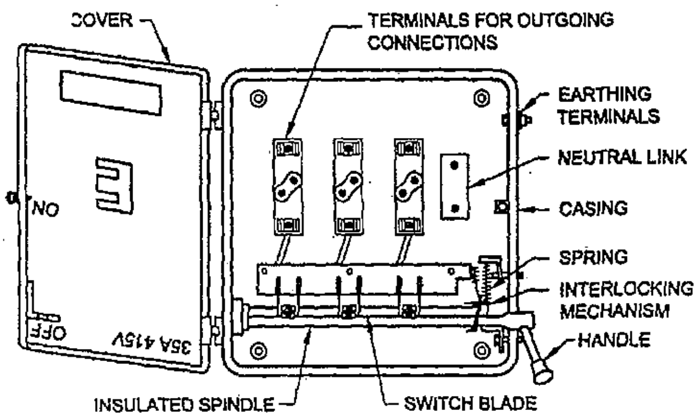

These switches need to be earthed through an earth terminal or screw provided in the outer casing.

The current rating of the switch varies from 16 to 400 amps. Specification of these switches should have

- current rating
- voltage rating
- type of enclosure (sheet steel or cast iron)
- whether with neutral link or otherwise
- rewirable type fuse carriers or HRC type fuse carriers.

HOLDING ACCESSORIES

Goliath Edison screw-type holders

The cover of this type of holder is made of porcelain. Such holders are used in studios, headlights, floodlights, focusing lights etc. These holders are used for more than 300W lamps.

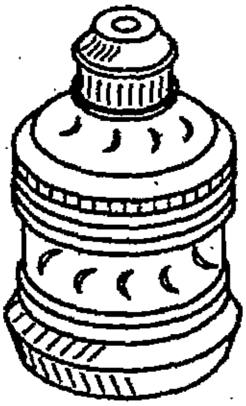

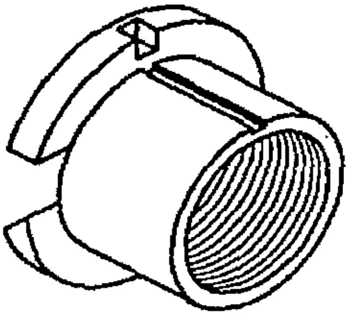

Swivel lamp-holders

The swivel lamp-holder is designed for wise angle directional lighting which is used for the lighting of shop windows, showcases, etc. It consists of a ball and socket joint fitted between a back plate and the lamp-holders. It is available in bayonet cap type, small bayonet cap type and Edison screw type. All these type of holders are also available for wall fixing patterns or ceiling pattern.

One type of swivel lamp-holders is shown in Fig.

Specification of a lamp-holder

While specifying the lamp-holders, the type of material used for construction, type gripping, type of mounting, working current and voltages should also be specified.

Safety accessories

A fuse is a safety accessory. It is connected in series with the circuit and protects the electrical apparatus and equipment from damage, when excess current flows.

There are several types of fuses used in the electrical field. But the kit-kat type fuse is commonly used in domestic installation. While specifying fuses in general, their type, current capacity and working voltage also should be specified.

Types of fuses

- Kit-kat type (Rewirable fuse)
- Iron-clad fuse cut out.

Kit-kat type fuse

These are the ones mostly used in domestic installations. This fuse consists of a porcelain base having two fixed contacts, for connecting the incoming and outgoing cables. The bottom part of the fuse is called the base and the top is called the fuse-carrier. The line and load wires are connected in the base terminals and the carrier is provided with a fuse, as shown in Fig. The base is fixed but the carrier is removable.

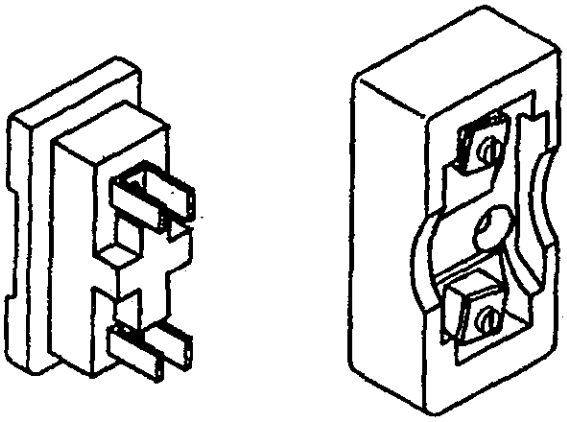

Advantages

- Easy to rewire the fuse.
- Very cheap to replace the fuse wire.

These kit-kat fuses meant for low rupturing capacity and not suitable for power circuits. They are capable of delivering enormous amount of power in case of short circuit.

Iron-clad fuse cut outs

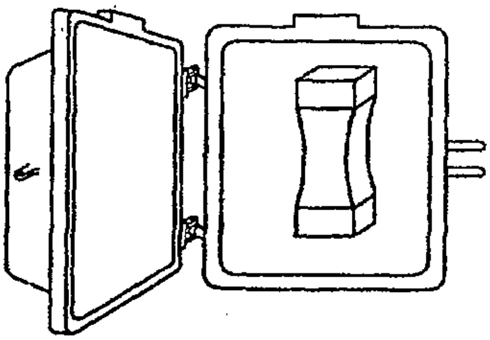

These are kit-kat fuses in an iron cover. The iron cover has facility to be closed and sealed with a lead seal. This is used at the incoming side of the power supply and sealed by the supply authorities to ensure the line is not loaded beyond a certain prescribed current capacity.

Outlet accessories

These accessories are used to take the supply for the portable appliances like table fans, TV, electric irons etc.

Socket outlet current rating

The standard ratings shall be 6, 16 and 32 and 240 volts. The following types are normally used for domestic purposes. They have to be specified according to the mounting type, number of pins, current capacity and voltage.

Two-pin socket

This socket is rated as 6A, 250V, having only two pins without earth connection. These are suitable only for double insulated appliances (having PVC or insulated body).

Two-pin plug

Its is used for taking the supply from the socket. It has got two pins of the same size.

Lamp-holders

A lamp-holder is used to hold a lamp. Earlier, brass holders were most commonly used but nowadays these have been replaced by bakelite holders. These may contain solid or hollow spring contract terminals. Four type of lamp-holders are mainly available.

- Bayonet cap lamp-holders
- Screw type holders
- Edison screw type lamp-holders
- Goliath Edison screw type lamp-holders

According to the Bureau of Indian Standard, 732, Clause 5.8, all incandescent lamps, unless hung at a height of 2.5m (8 ft), shall be provided with standard bayonet holders for lamps upto and including 200 watts. For lamp powers above 200 W and upto 300 watts Edison screw holders are to be used and for above 300 watts Goliath screw holders are to be used.

Bayonet cap lamp-holders

In this type, the bulb is fitted into the slot, and is held in position by means of two pins in the lamp cap. It has solid or hollow spring contact terminals, and the supply mains through the switch are connected to these contacts. In B.C. types there are two grooves on the circular construction of all types of holders. The groove and the contact terminals are right angle to each other. In this type of holders, the lamp is inserted, forced in, turned slightly and then left in position. These holders can be classified further as explained below.

Pendent lamp-holders

This holder shown in Fig. is used in places where the lamps are required in a hanging position. These holders are made of either brass or bakelite. An exploded view of this holder shows the parts of the holder. These holders are used along with ceiling roses for suspending the lamps form the ceiling.

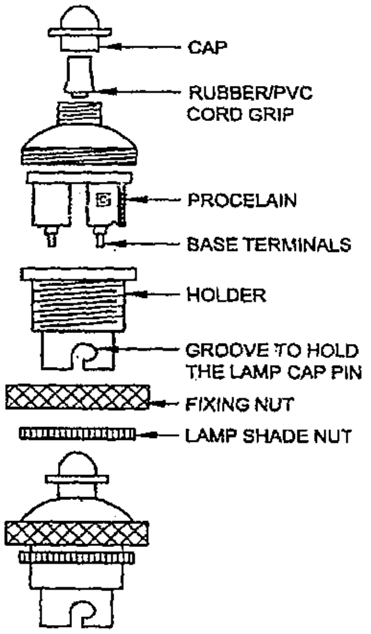

Batten lamp-holders

The straight batten holder, shown in Fig. is used on a flat surface on the round block, wooden board etc. These holders are made of either brass or bakelite.

Angle holders

The angle bottom holder, shown in Fig. is to hold the lamp in a particular angle. These are made of either brass or bakelite. These are used for advertising boards, window display, kitchens etc.

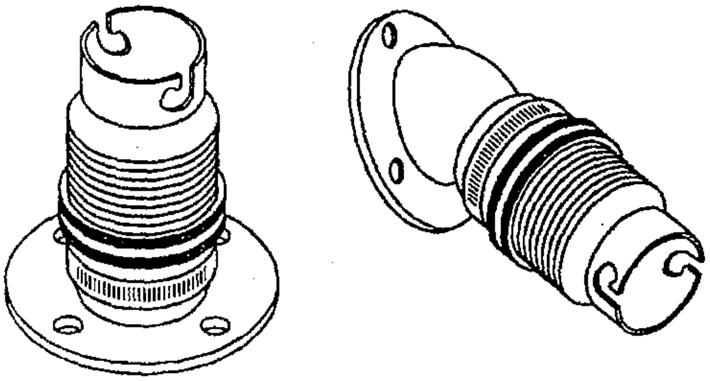

Bracket holders

This holder shown in Fig. is used with a bracket. These are made of brass and are used to give direct light to a particular place. Brass bracket holders need to be earthed as per BIS recommendations.

These are fixed on the bracket by the internal threading of the cap.

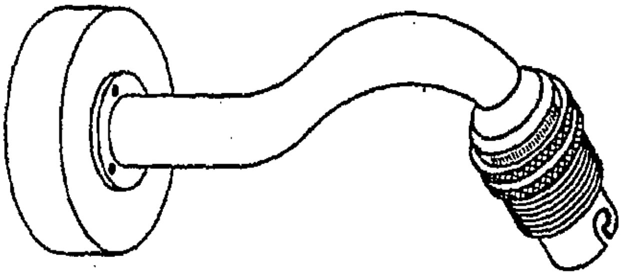

Tube light or fluorescent lamp-holders and starter holders

Generally the fluorescent lamp-holders are of a bi-pin type. Fig. shows a holder for the fluorescent lamp, a holder for the starter and a combined holder for the tube and starter.

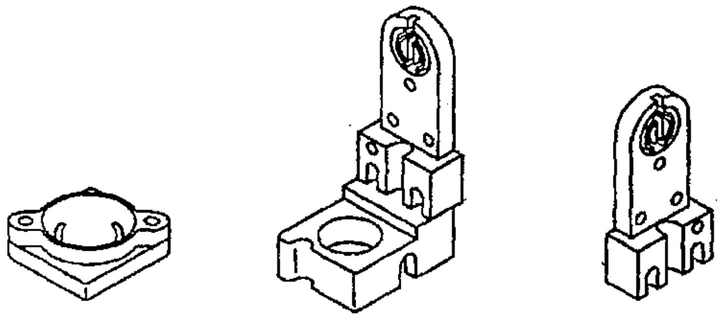

Edison screw-type lamp-holders

In this type, the holder is provided with inner screw threads and the lamp is fitted in it by screwing. It has a centre contact which is connected to the live wire and the screwed cap is connected to the neutral wire.

For lamps with wattage above 200W and not exceeding 300W, Edison screw-type holders are used.

Edison screw lamp holders have spring-loaded central contact to ensure good contact. An Edison screw-type holder is shown in Fig.

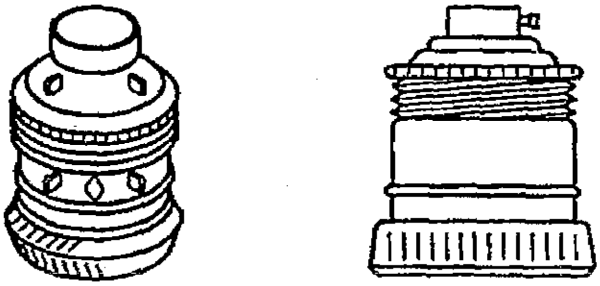

Three-pin socket

This type of socket is suitable for light and power circuits. These sockets are rated as 6A, 250V or 16A, 250V and are available as surface-mounting type and flush type. They are shown in Fig. These are three terminals marked as Line (L) Neutral(N) and Earth (E). The line terminal is always on the right hand side, the neutral terminal on the left hand side and the top is the earth terminal which is larger in diameter. In all the cases, the earth wire must be connected to the earth terminal of the socket.

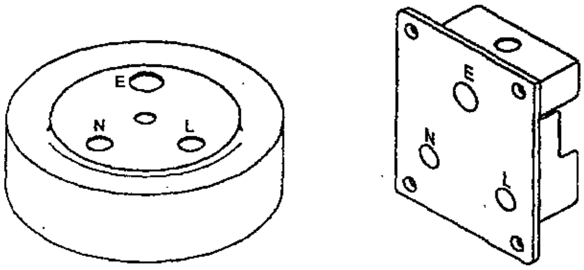

Three-pin plug

It is used for taking the supply from the socket. It has three pins. Two are similar in size and the third one is bigger and longer which is for earth as shown in Fig. These are also rated as 6A, 250V or 16A, 250V. These are made of bakelite, PVC materials.

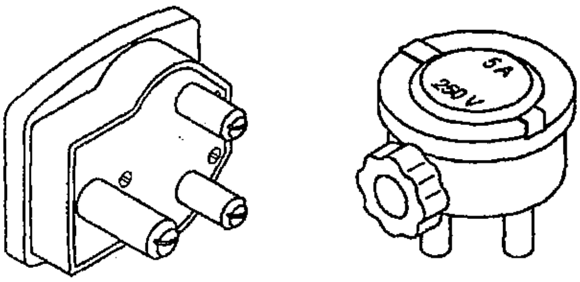

A socket which is controlled by a switch, is also available. Multi-pin sockets are also available which are suitable for 2 pins and 3 pins having 5 holes in one unit. Further multi-pin sockets for 3 pin of 6 amps and 16 amps are also available having 6 holes in one unit.

General accessories

Some accessories are used for general and special purposes such as:

- appliance connectors (or) iron connectors
- adapters
- ceiling roses

  a) two-plate

  b) three-plate

- connectors
- distribution board
- neutral links.

Appliance connectors or iron connectors

These are used as female connectors to supply current to electric kettles, electric iron, hotplate, heaters etc. It is made of bakelite or porcelain. The wires are connected with two brass terminals and the earth connection is provided with a twin nickel spring. The cable entry has a rubber protection type. These are rated as 16A, 250V. Some different types of iron connectors are shown in Fig.

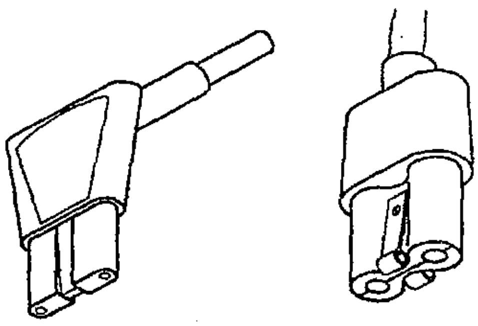

Adaptor

An adaptor is shown in Fig. They are used for taking supply from a lamp holder for small appliances. They are made out of bakelite. They are available in ratings up to 6A, 250V.

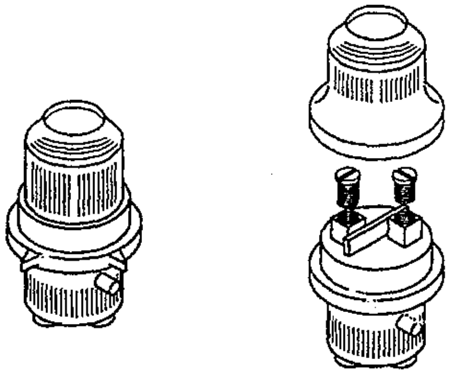

Adaptors with multiple plugs are also available for taking supply to a number of appliances from a single point.

These adaptors should not be used in bathrooms or other damp places.

Ceiling roses

Ceiling roses are used to provide tapping points from the wiring for supplying the power to fans, pendent-holders, tube lights etc. Normally flexible wires are used for tapping from the ceiling roses.

Ceiling roses have two parts, base and cover, both made of bakelite. The cover has a hole in the centre for the connecting wires to be taken out. There are threadings on the internal sides so that the cover may be fixed or tightened with the base. The base has terminals and holes for fixing on the block etc. and for wires to connect with the supply. Two types of ceiling roses are in use:

a. Two-plate ceiling rose

This is made of bakelite and it has 2 terminals (phase & neutral) which are separated from each other by a bakelite bridge. Each of the terminal plates is provided with a metallic sleeve and a binding screw on one side through which the circuit wire from the back via the mounting block enters them. The other side of the terminal plate is provided with a washer and screw for tap wire connection. The two-plate ceiling rose is used for 6A, 250V current capacity. It is not used in circuits whose voltage exceeds 250V.

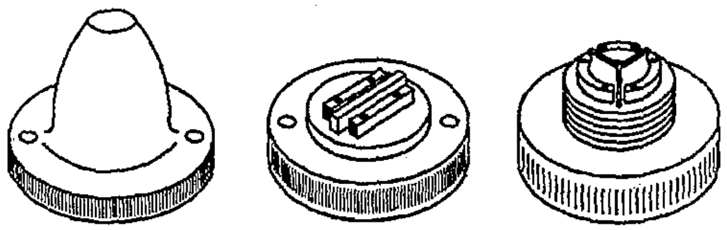

b. Three-plate ceiling rose

This type of ceiling rose has 3 terminals which are separated from each other by a bakelite bridge. It can be used for two purposes.

- Bunch light control
- To provide tapping for phase wire as shown in Fig.

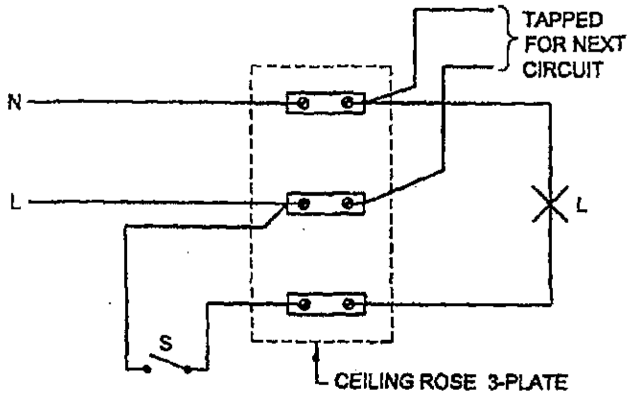

These ceiling roses are available in the rating of 6A, 250V. The covered 2 plate and 3 plate ceiling roses will look alike but could be identified by seeing the rear side.

Connectors

Connectors are used to extend the length of the wire without jointing. They are made of porcelain, bakelite or PVC based material. There is a brass sleeve with threading for small screws to tighten the

wire in the sleeves as shown in the figure. These are available insingle way, two-way, three-way, six-way, 12-way types. These are rated according to the current and voltage capacity – 6A, 250V, 16A 250V, 32A 250V, 16A 500V, 32A 500V etc.

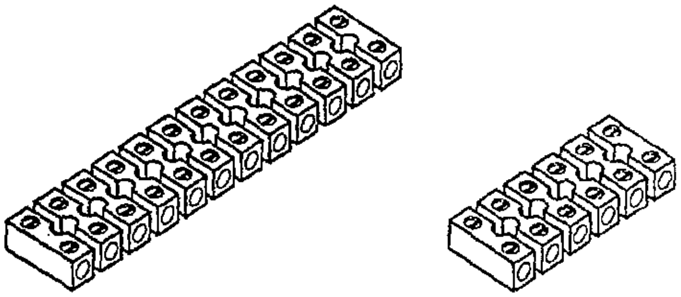

Distribution Board

These are used where the total load is high and is to be divided into a number of circuits. These are used where the load is more than 800W. The number of fuses in the boards is according to the number of circuits, and a neutral link is also provided so that the neutral wire can be taken for different circuits. All these branch fuses are enclosed in a metal box. These boards are available as two-way, three-way, 4,6, 12-way types as shown in Fig.

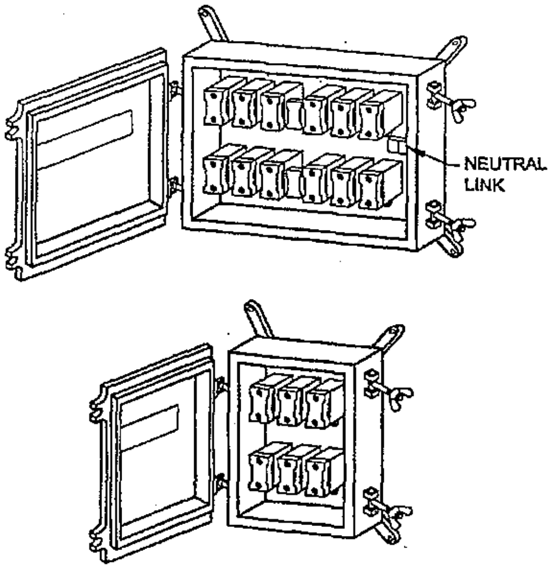

Neutral link

In a three-phase system of wiring installations, the phases are controlled through switches, and the neutral is tapped through switches, and the neutral is tapped through a link called neutral link. The neutral link consists of a terminal for incoming current and a multi-way outgoing circuit. The metal terminals are mounted on high grade vitreous porcelain base. The ratings are 16A, 32A, 64A, 100A neutral link.

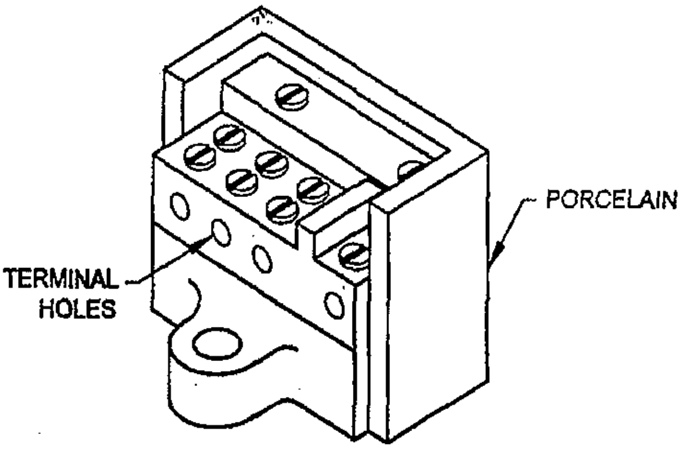

NEUTRAL LINK

Conduit pipe

These are made of think steel material (or) galvanized iron. These are available in different size of length in conduit wiring. Wires are taken through them which gives good protection to the wire. It is preferred in workshops. Conduit pipes are very essential when the wires are to be taken through the wall (or) ceiling.

Bends

These are made to change the direction of wiring. This has got internal thread on both sides. In same bends, there is inspection cover which is screwed in.

T. Box

When two wires are running in one direction another two wires are to be dropped in a direction perpendicular to that "T" Box is used. This has also got an inspection cover through which the wires are pulled and joints are made.

Junction Box

These are used for number of wires to be joined and connected. This also has a cover which can be opened.

Clamps

These are used to hold the conduit pipes (or) PVC pipe in the wall or ceiling rigidly by means of screws. These are different types of clamps, ½ inch, ¾ inch, 1 inch, 1.1/2 inches, etc.

Round Block

These are fixed on the wall (or) ceiling and serve as a Fixture for a ceiling rose (or) for one switch and tube light fitting.

3. STUDY OF TYPES OF WIRING

TYPES OF WIRING

1. Cleat wiring (V.I.R wire is in porcelain cleats)
2. Casing and capping wiring (V.I.R wire in wooden casing)
3. C.T.S wiring (CTS wire run over in wooden reaper).
4. PVC Pipe wiring (VIR wire in PVC pipe)

   (i) Open wiring (ii) Concealed wiring.

Types of wires and cables:

1. Single strand wire } A
2. Mutli-strand wire }

A.1

1. VIR wire (Vulganised Indian Rubber Insulated cable)
2. CTS (or) TRS Cable (Tough Rubber sheathed)
3. PVC Cable
4. Lead Sheathed Cable
5. Flexible Cable
6. Weather proof cable.

Copper and Aluminium Cables

For the same current carrying capacity, Aluminium cables are thicker in cross sectional area than the copper cables.

Using Aluminium cables as aluminium has low mechanical strength, less current carrying capacity for the same area of cross section, low melting point and its quick in forming oxides on surface than copper.

Advantage of multi-stranded conductors over solid conductors:

Solid Conductors	**Stranded Conductors**
1.Rigid	1. Flexible
2.Less mechanical strength	2. More mechanical strengh
3. Available in square, round and flat shapes	3. Available in round shape having small in dia metres.
4. Used for bus bars	4. Used for cables and wires

Electrical circuit Breakers

Uses of circuit breaker is if any fault in electrical circuit, this circuit breakers disconnect the whole supply to the load side.

Types of Circuit Breakers

1. Oil Circuit Breakers (OCB)
2. Air Circuit Breakers (ACB).

Relays

In any electrical circuit, the earth fault, short circuit (over current) occurs, the relays disconnect the supply automatically.

Types of Relays

1. Earth fault (or) earth leakage relay
2. Over current (or) over load relay.

There are two types of Electrical Connection in houses:

1. Joint Box(or) T System
2. Looping System.

Joint Box (or) Loop System

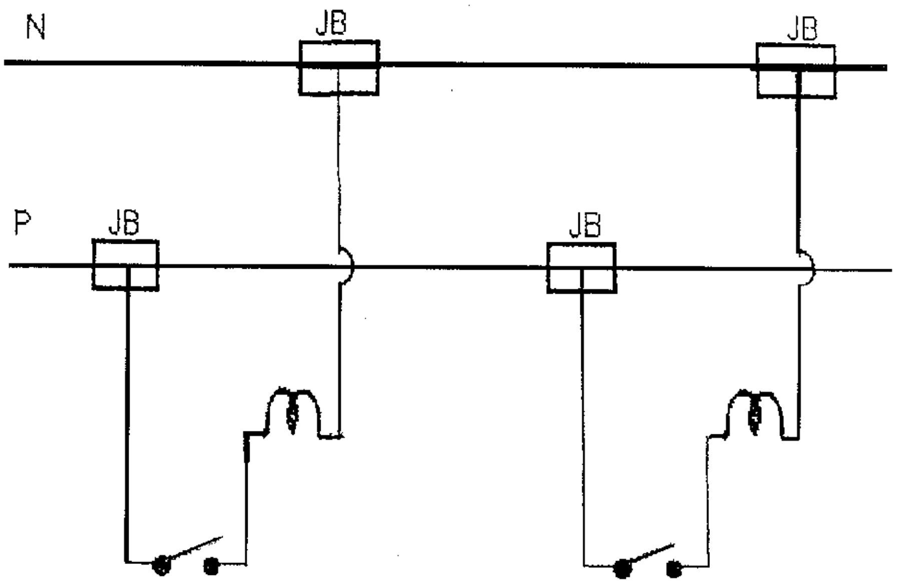

In this method, Joint Box and connector are used for electrical connection. Though the transmission necessity is smaller, in this type junction box and connector are needed.

Looping system

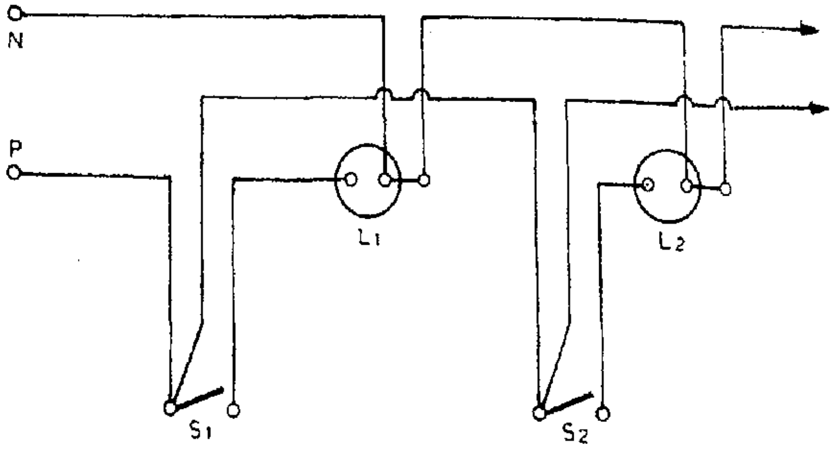

In this method, phase wire connected to switch, and neutral wire connect directly to ceiling nose. So there is no need of Joint Box and Connectors.

Method of supply

1. Distribution Board System
2. Tree System.

DISTRIBUTION BOARD SYSTEM

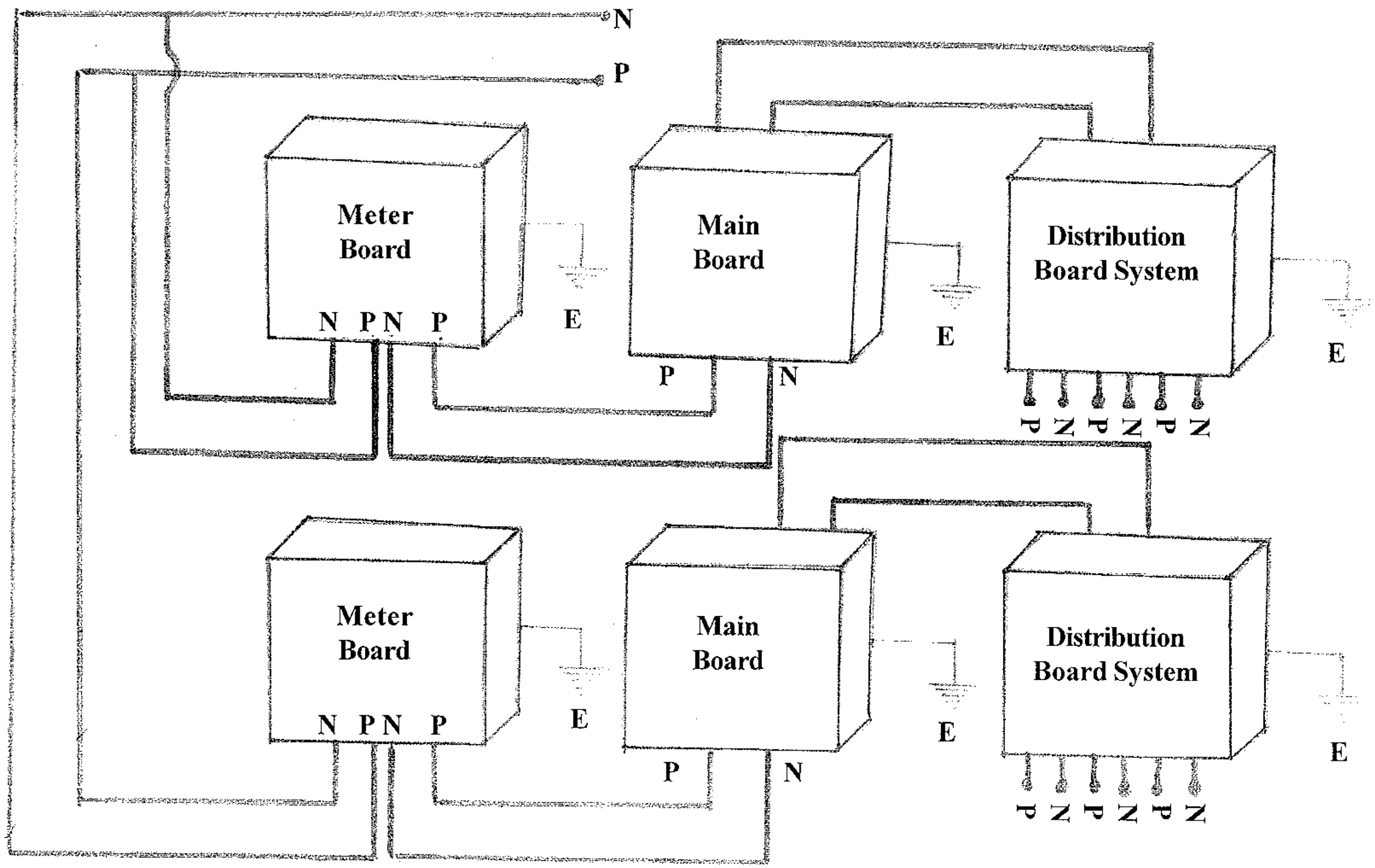

E - Earth P - Phase N - Neutral

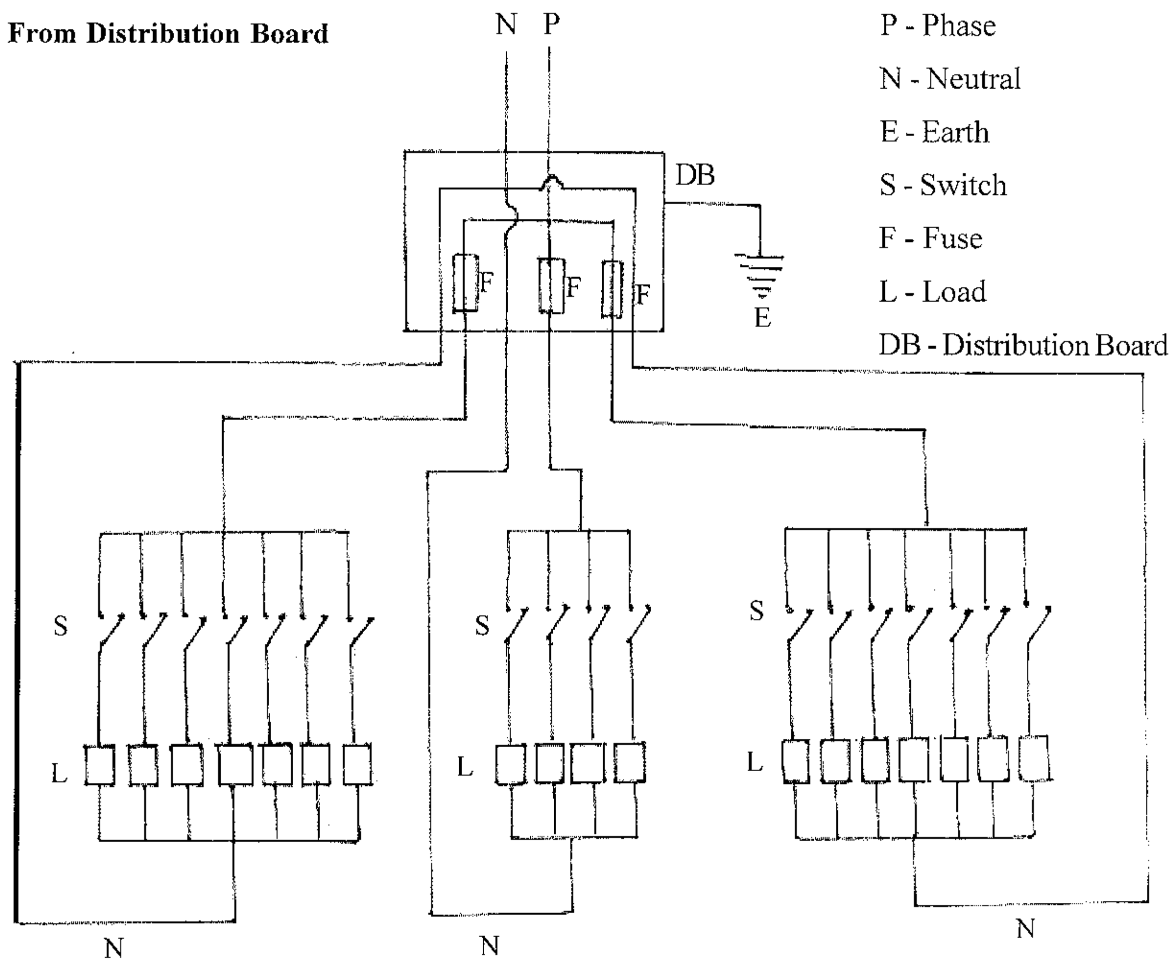

In this system, the supply is from meter board through the distribution board. From distribution board, the branch circuits may be taken out for loads. Each branch circuit has a fuse unit for the purpose of separated from other circuit.

Types of Joints in Electrical Conductors

In electrical work, different types of joints are used based on the requirement. The service to be performed by a joint determines the type to be used.

Some joints may require to have good electrical conductivity. They need not necessary be mechanically strong. For eg: the joints made in junction boxes and conduit accessories.

On the other hand, the joints made in overhead conductors, need to be not only electrically conductive but also to be mechanically strong to withstand the tensile stress due to the weight of the suspended conductor and wind pressure.

Some of the commonly used joints are listed below:

- Pit-tail or rat-tail or twisted joints.
- Married joint
- Tee Joint

- Britannia straight joint
- Western Union Joint
- Scarfed Joint
- Tap joint in single stranded conductor.

Pig-tail/rat-tail/twisted joint

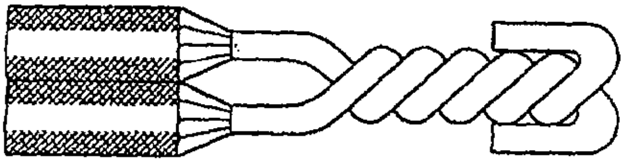

This joint made in either single or multi-strand conductors is suitable for places where there is no mechanical stress on the conductors as found in junction boxes or conduit accessories boxes. However, the joint should maintain good electrical conductivity.

Married Joint

A married joint made with stranded conductors is used in places where appreciable electrical conductivity is required along with compactness.

As the mechanical strength is less, this joint could be used at places where the tensile stress is not too great.

Tee Joint

This joint in the stranded conductors could be used in overhead distribution lines where the electrical energy is to be tapped for the service connections.

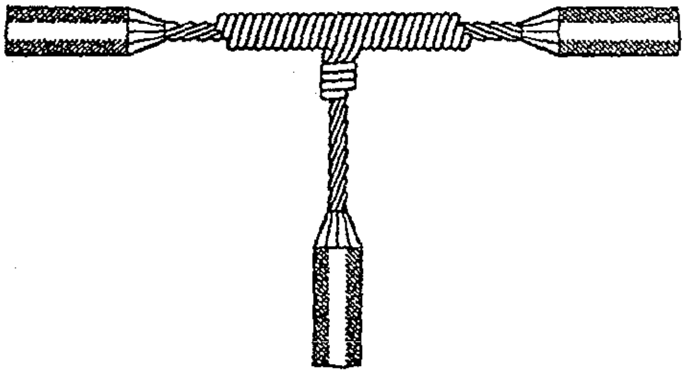

Britannia Joint

This joint made in a single strand conductor of 4 mm dia. Or more is used in overhead lines where considerable tensile strength is required.

It is also used both for inside and outside wiring.

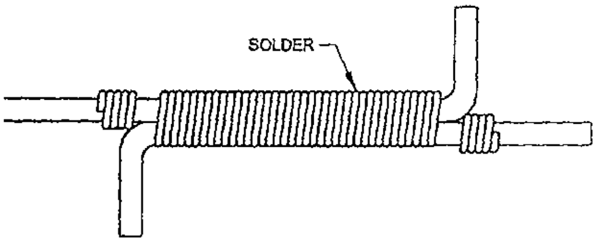

Britannia Tee Joint

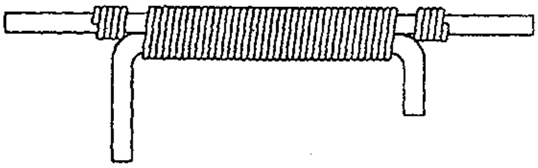

This joint made in single strand conductors of 4mm dia. Or more is used for overhead lines for tapping the electrical energy perpendicular to the service lines.

Western Union Joint

This joint made in single strand conductors of 4mm dia. Or more is used in overhead lines for extending the length of the wire where the joint is subjected to considerable tensile stress.

Scarfed Joint

This joint made in single strand conductors is used in large single conductors where good appearance and compactness are the main considerations, and where the joint is not subjected to appreciable tensile stress as in earth conductors used in indoor wiring. It is preferable to solder this joint to increase the reliability.

Tap joint in single stranded conductors of diameter 2mm or less.

By definition, a tap is the connection of the end of one wire to some point along the run of another wire.

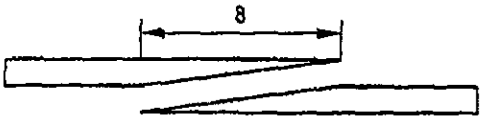

(a) SCARFED JOINT

(b) SCARFED JOINT

The following types of taps are commonly used.

- Plain
- Aerial
- Knotted
- Cross-Double-Duplex.

Plain tap joint

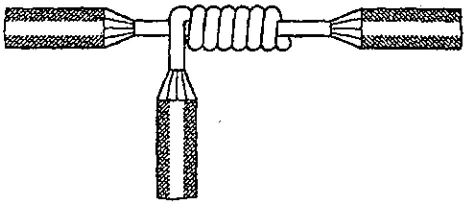

This joint is the most frequently used and is quickly made. Soldering makes the joint more dependable.

Aerial tap joint

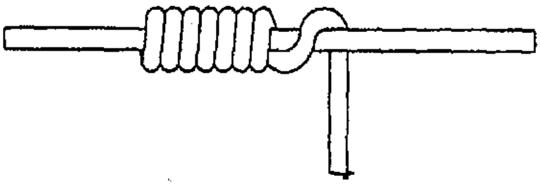

This joint is intended for wires subjected to considerable movement and it is left without soldering for this purpose. This joint is suitable for low current circuits only. It is similar to the plain tap except that it has a long or easy twist to permit the movement of the tap wire over the main wire.

Knotted tap joint

A knotted tap joint is designed to take considerable tensile stress.

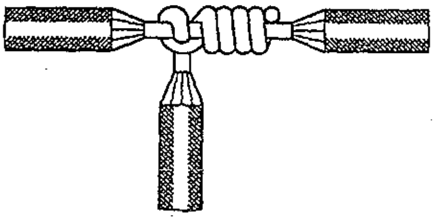

Duplex-cross tap joint

This joint is used where two wires are to be tapped at the same time. This joint could be made quickly.

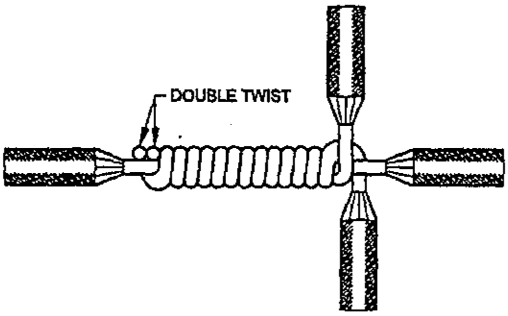

Double-cross tap joint

This joint is used where two wires are to be tapped at the same time. This joint could be made quickly.

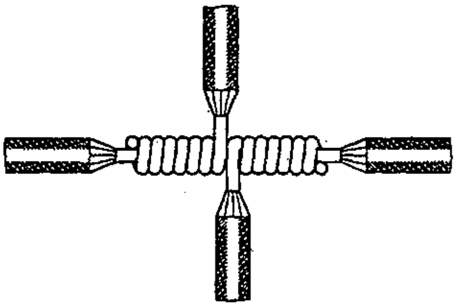

Double-cross tap joint

This joint is simply a combination of two plain taps.

Diagram and System used in domestic wiring

The terms used in wiring installation drawings are explained here.

1. Lay out diagram
2. Installation plan
3. Circuit diagram
4. Wiring diagram.

1. Layout diagram

It is the simplified version of the wiring diagram. Its purpose is to inform the reader quickly and exactly what the circuit is designed for with giving any information on the circuit diagram.

Normally the layout plan is drawn and then the wiring is drawn. After completion of wiring diagram, the number of cables to be run in each pipe and the size of PVC Pipe (or) battern are estimated with the help of the distance marking in the layout plan. The estimation of cable could be made.

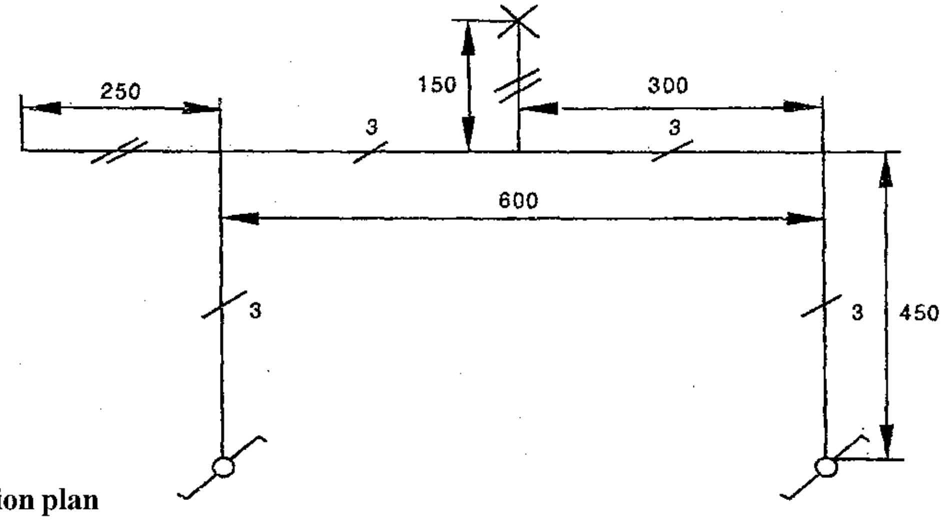

Installation plan

It shows the physical position of accessories in an installation and gives the final appearance of the installation. It highlights the type of conduit, accessories, spacing of gutties, clamps, etc.

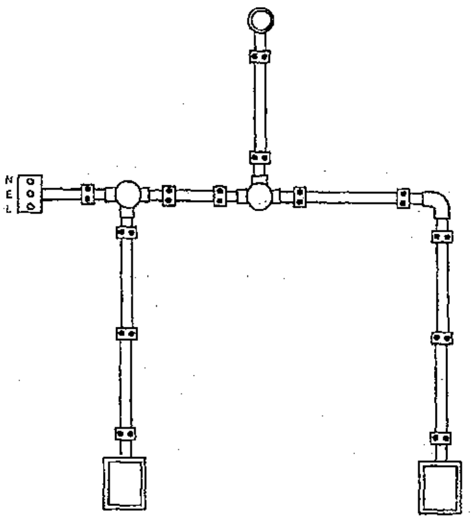

Circuit diagram

The purpose of the circuit diagram is to explain the function of the various accessories in the circuit.

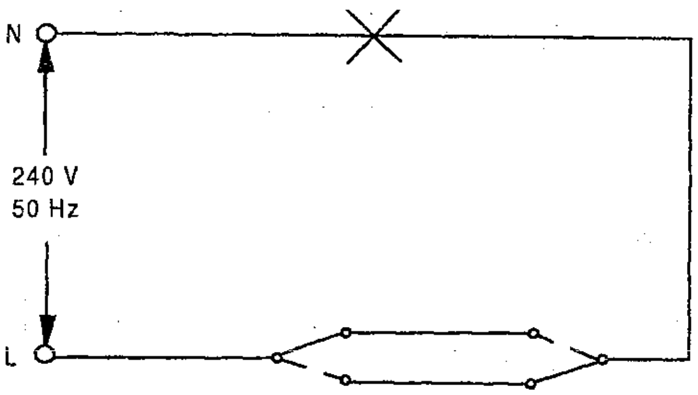

Wiring diagram

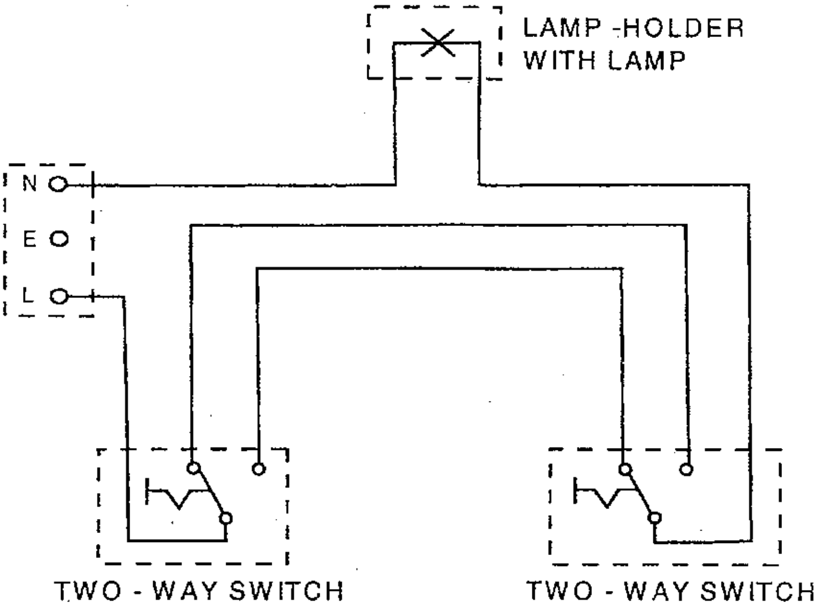

The wiring diagram may not have marking. Use of the wiring diagram enables the technician in the initial stage of planning. This wiring diagram is of great use of test and rectify faults in the installation during maintenance work.

4. ONE LAMP CONTROLLED BY ONE SWITCH

Aim

Control one lamp by one S.P.T. switch and give the power supply.

Type of Wiring

P.V.C. Pipe Wiring

Tools Required

Sl.No.	Name	Quantity
1.	Hammer	1 No
2.	Screw Driver 200 mm	1 No
3.	Cutting Plier 150 mm	1 No
4.	Pocker 200 mm long	1 No
5.	Electrician Knife	1 No
6.	Tester	1 No
7.	Nose Plier	1 No
8.	Measurement Tape	1 No
9.	Hacksaw frame with Blade	1 No
10.	Rawl Jumper and bit No: 8	1 No
11.	Connector screw driver 100 mm	1 No
12.	Try square 200 mm	1 No

Materials required

Sl.No.	Name	Quantity
1.	¾ inch P.V.C. Pipe	3 lengh
2.	1/18 copper wire	10 meters
3.	S.P.T. Switch 60/240V	1
4.	Lamp 60 watts	1
5.	¾ inch clamp	12
6.	Ceiling rose 6A/240V	1
7.	Pendent holder 6A/240V	1
8.	Switch Box 3" x 2"	1
9.	"T" Joint P.V.C. ¾ inch	1
10.	¾ inch wood screw	24
11.	Rowel Grip	30 pieces
12.	Insulation tape roll	1
13.	Oneway junction box	1
14.	Flexible wire	1 metre
15.	1½ wooden screw	6

Layout diagram

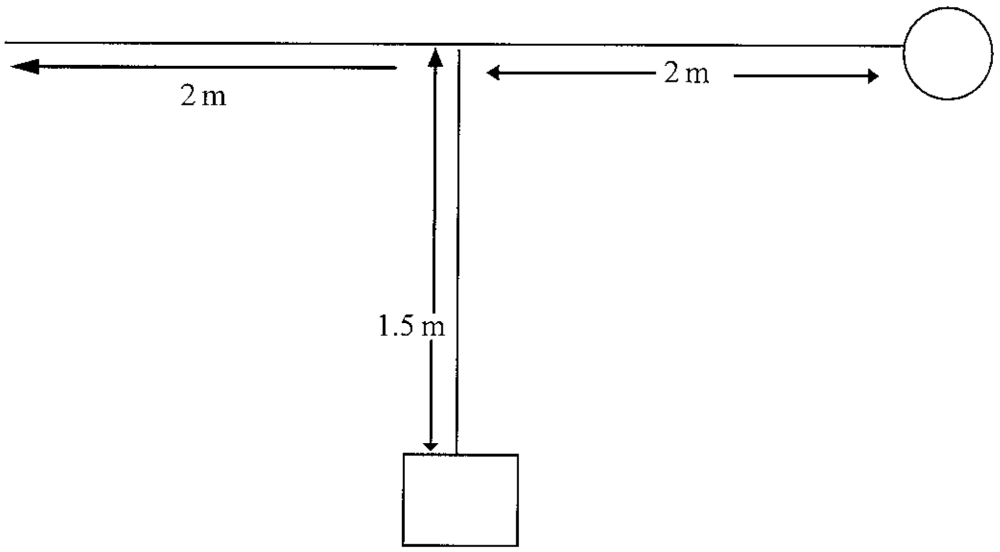

Connection diagram

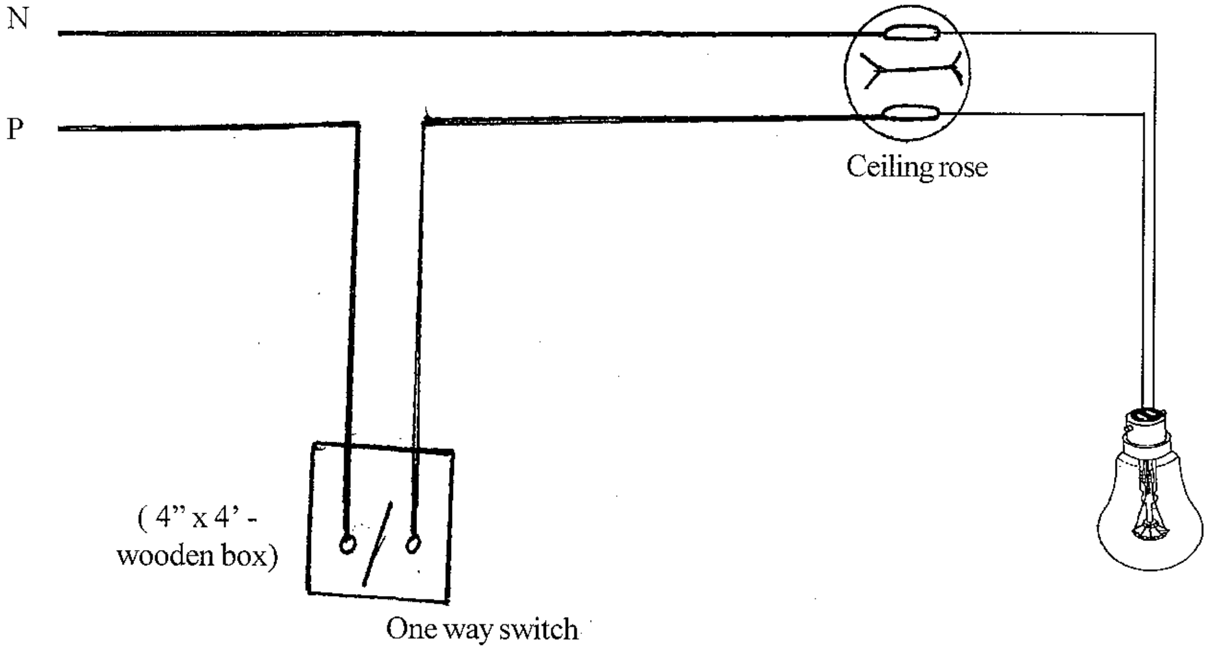

Procedure

1. Study Layout diagram and the cable route, distance location of fitting and other accessories
2. Draw the wiring diagram for the given load as per the line diagram
3. List out the materials required for this wiring
4. Conform how to frame the PVC Pipe
5. Fix the PVC pipe by using clamps, junction box and switch box using wood screws.
6. Run the cable in the PVC pipe as per the wiring diagram
7. Connect the terminals of switch and ceiling rose as per the circuit diagram.
8. Connect the leads of pendent holder to ceiling rose by using flexible wire.
9. Fix the lamp in pendent holder
10. Give supply and check the circuit.

5. TWO LAMPS IN-SERIES CONNECTION CONTROLLED BY ONE SWITCH

Aim

Control two lamps connected in series by one S.P.T. switch

Type of Wiring

P.V.C. Pipe Wiring

Tools Required

Sl.No.	Name	Quantity
1.	Hammer	1 No
2.	Screw Driver 200 mm	1 No
3.	Cutting Plier 150 mm	1 No
4.	Pocker 200 mm long	1 No
5.	Electrician Knife	1 No
6.	Tester	1 No
7.	Nose Plier	1 No
8.	Measurement Tape	1 No
9.	Hacksaw frame with Blade	1 No
10.	Rawl Jumper and bit No: 8	1 No
11.	Connector screw driver 100 mm	1 No
12.	Try square 200 mm	1 No

Materials required

Sl.No.	Name	Quantity
1.	1/18 copper wire	14 meters
2.	Flexible wire	2 meter
3.	S.P.T. Switch (one way switch)	1
4.	Ceiling rose	2
5.	Lamp 60 watts clamp	2
6.	Pendent holder	2
7.	Switch Box 3" x 2"	1
8.	Two way Junction Box	1
9.	"T" Joint P.V.C. ¾ inch	1
10.	One way Junction Box	1
11.	Rowel Grip	40 pieces
12.	¾ inch wooden Screw	30
13.	1½ inch wooden screw	8
14.	¾ inch clamp	15
15.	PVC Insulation Tape	1
16.	¾ inch P.V.C. Pipe	3 length

Layout Diagram

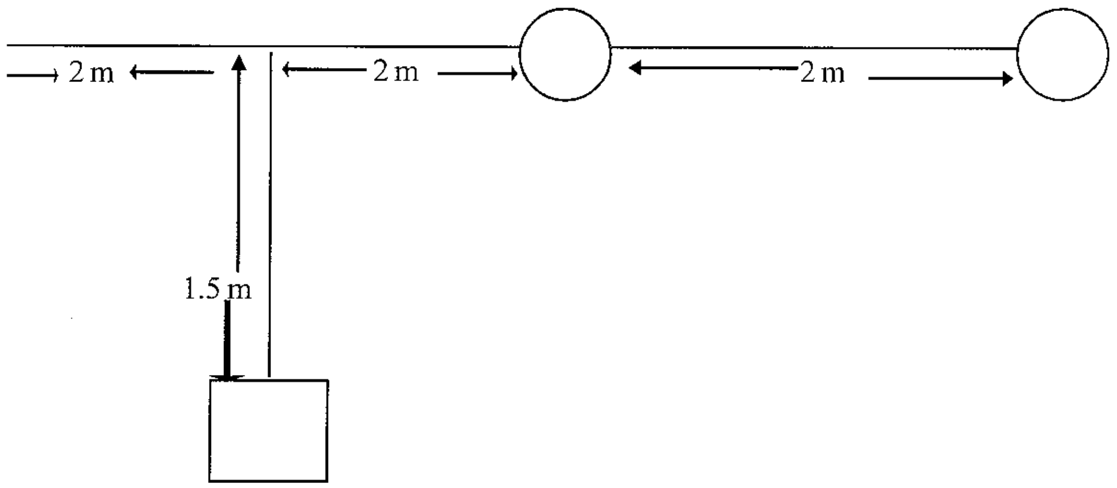

Connection Diagram

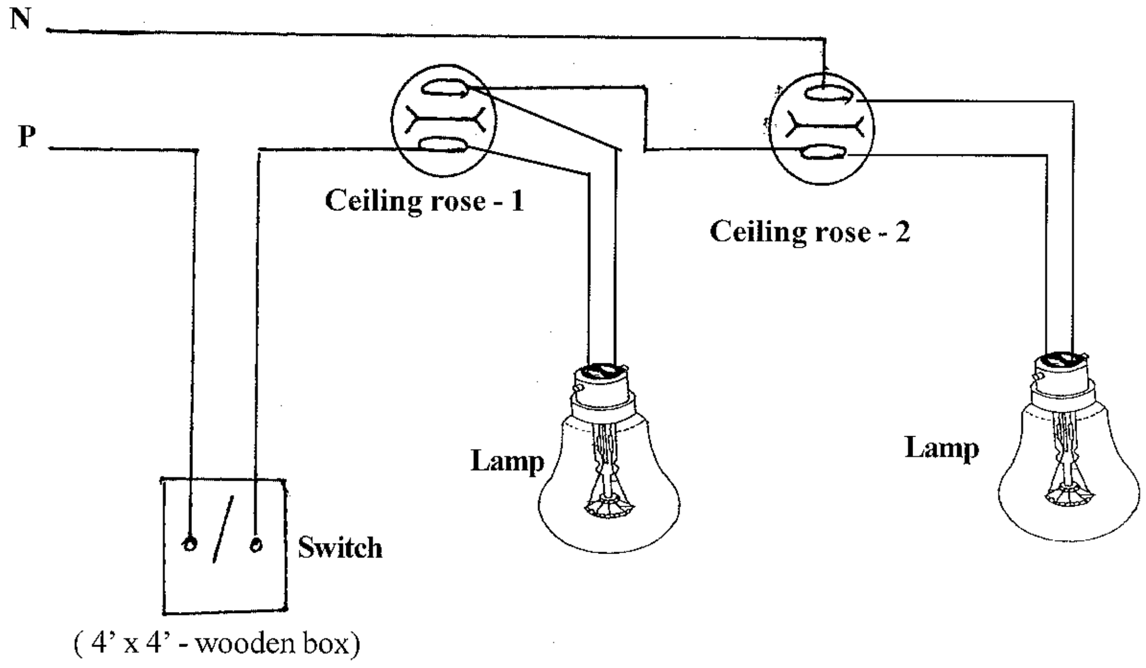

Procedure

1. Study layout diagram and the cable route, distance location of fitting and other accessories
2. Draw the wiring diagram for the given load as per the line diagram
3. List out the materials required for this wiring
4. Conform how to frame the PVC Pipe
5. Fix the PVC pipe by using clamps, junction box and switch box using wood screws.
6. Run the cable in the pre pipe as per the wiring diagram
7. Connect the terminals of switch and ceiling rose as per the circuit diagram.
8. Connect the leads of pendent holder to ceiling rose by using flexible wire.
9. Fix the lamps in pendent holders
10. Give supply and check the circuit.

6. TWO LAMP IN PARALLEL CONNECTION CONTROLLED BY ONE SWITCH

Aim

Control two lamps connected in parallel by one S.P.T. switch

Type of Wiring

P.V.C. Pipe Wiring

Tools Required

Sl.No.	Name	Quantity
1.	Hammer	1 No
2.	Screw Driver 200 mm	1 No
3.	Cutting Plier 150 mm	1 No
4.	Pocker 200 mm long	1 No
5.	Electrician Knife	1 No
6.	Tester	1 No
7.	Nose Plier	1 No
8.	Measurement Tape	1 No
9.	Hacksaw frame with Blade	1 No
10.	Rawl Jumper and bit No: 8	1 No
11.	Connector screw driver 100 mm	1 No
12.	Try square 200 mm	1 No

Materials required

Sl.No.	Name	Quantity
1.	1/18 copper wire	14 meters
2.	Flexible wire	2 meter
3.	S.P.T. Switch (one way switch)	1
4.	Ceiling rose	2
5.	Lamp 60 watts clamp	2
6.	Pendent holder	2
7.	Switch Box 3" x 2"	1
8.	Two way Junction Box	1
9.	"T" Joint P.V.C. ¾ inch	1
10.	One way Junction Box	1
11.	Rowel Grip	40 pieces
12.	¾ inch wooden Screw	30
13.	1½ inch wooden screw	8
14.	¾ inch clamp	15
15.	PVC Insulation Tape	1
16.	¾ inch P.V.C. Pipe	3 length

Layout Diagram

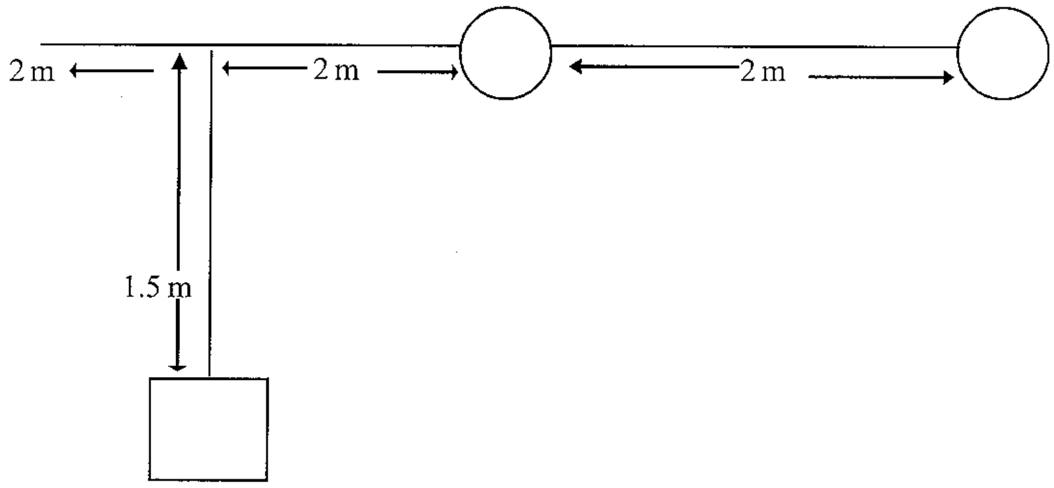

Connection Diagram (Parallel)

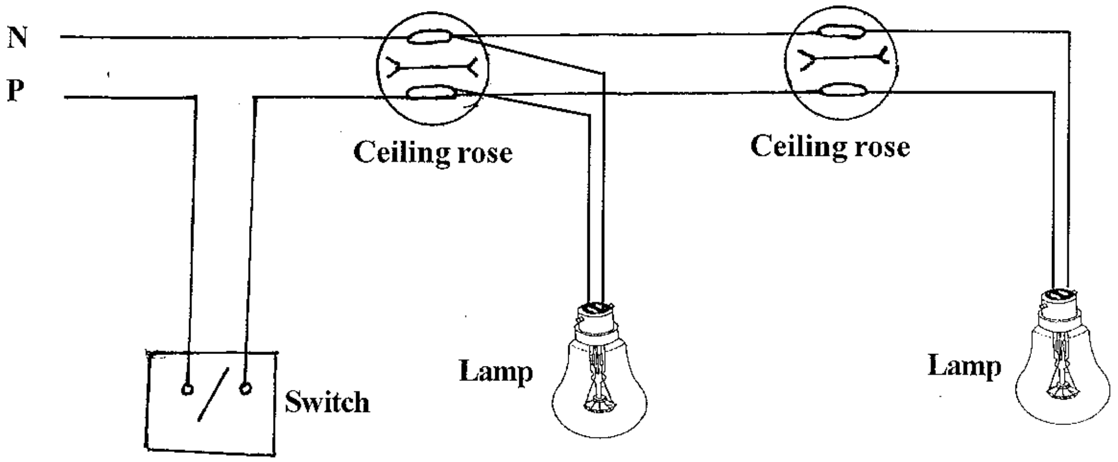

Procedure

1. Study layout diagram and the cable route, distance location of fitting and other accessories
2. Draw the wiring diagram for the given load as per the line diagram
3. List out the materials required for this wiring
4. Conform how to frame the PVC Pipe
5. Fix the PVC pipe by using clamps, junction box and switch box using wood screws.
6. Run the cable in the PVC pipe as per the wiring diagram
7. Connect the terminals of switch and ceiling rose as per the circuit diagram.
8. Connect the leads of pendent holder to ceiling rose by using flexible wire.
9. Fix the lamp in pendent holder
10. Give supply and check the circuit.

7. STAIRCASE WIRING

Aim

Control one lamp by two way switch (staircase connection)

Type of Wiring

P.V.C. Pipe Wiring

Tools Required

Sl.No.	Name	Quantity
1.	Hammer	1 No
2.	Screw Driver 200 mm	1 No
3.	Cutting Plier 150 mm	1 No
4.	Pocker 200 mm long	1 No
5.	Electrician Knife	1 No
6.	Tester	1 No
7.	Nose Plier	1 No
8.	Measurement Tape	1 No
9.	Hacksaw frame with Blade	1 No
10.	Rawl Jumper and bit No: 8	1 No
11.	Connector screw driver 100 mm	1 No
12.	Try square 200 mm	1 No

Materials required

Sl.No.	Name	Quantity
1.	1/18 copper wire	30 meters
2.	¾ inch PVC Pipe	2 length
3.	2 way switch 6A, 240 V	2
4.	Ceiling rose	1
5.	60 watts lamp	1
6.	Pendent holder	1
7.	Silk wire	1/2 meter
8.	3 x 4 switch Box	2
9.	Two way junction box	1
10.	Three way junction box	1
11.	'L' Bend	1
12.	PVC Tape	1 Roll
13.	¾ inch clamp	24
14.	¾ inch wood screw	48
15.	1½ inch wood screw	3

Layout Diagram

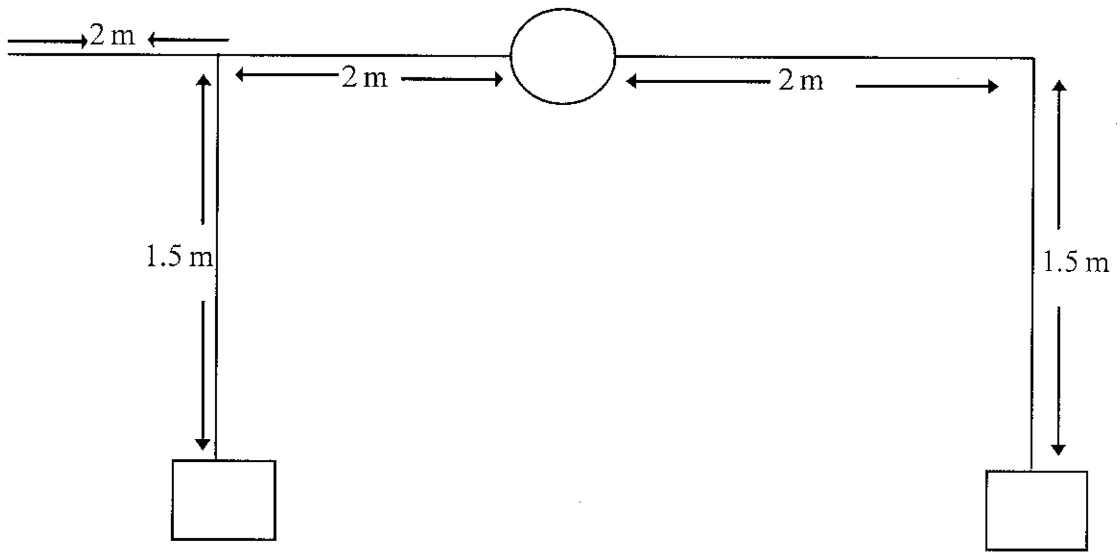

Connection Diagram (Staircase)

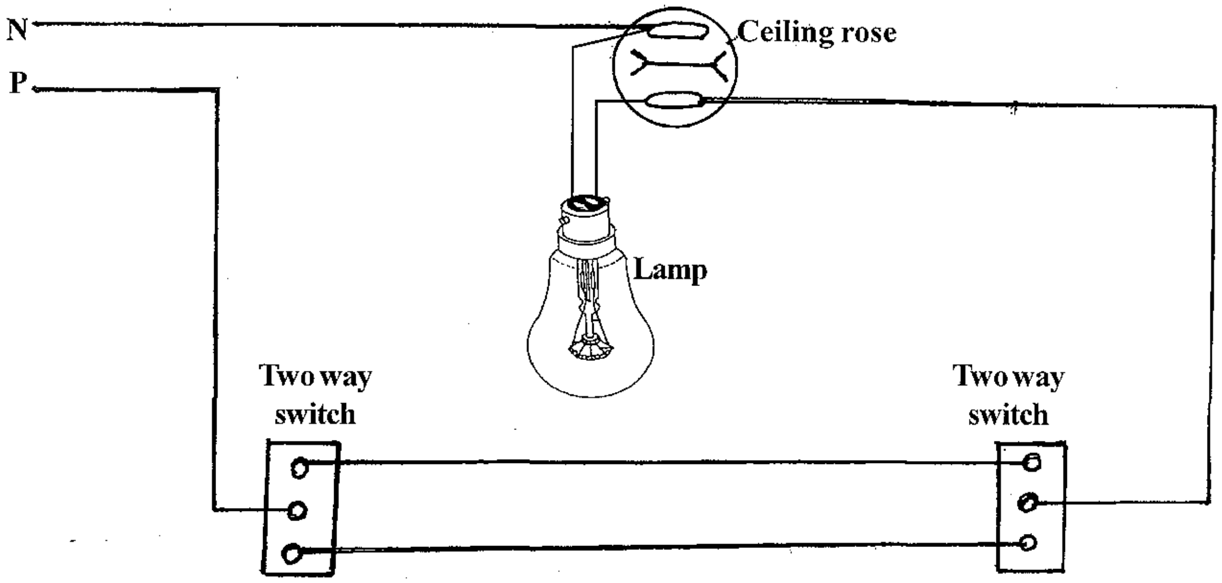

Procedure

1. Study layout diagram and the cable route, distance location of fitting and other accessories
2. Draw the wiring diagram for the given load as per the line diagram
3. List out the materials required for this wiring
4. Conform how to frame the PVC Pipe
5. Fix the PVC pipe by using clamps, junction box and switch boxes using wood screws.
6. Run the cable in the PVC pipe as per the wiring diagram
7. Connect the terminals of switches and ceiling rose as per the circuit diagram.
8. Connect the leads of pendent holder to ceiling rose by using flexible wire.
9. Fix the lamp in pendent holder
10. Give supply and check the circuit.

8. WIRING TWO LAMP AND THREE PIN SOCKET

Aim

Wiring two lamps with switch control and three pin socket with switch control.

Type of Wiring

P.V.C. Pipe Wiring

Tools Required

Sl.No.	Name	Quantity
1.	Hammer	1 No
2.	Screw Driver 200 mm	1 No
3.	Cutting Plier 150 mm	1 No
4.	Pocker 200 mm long	1 No
5.	Electrician Knife	1 No
6.	Tester	1 No
7.	Nose Plier	1 No
8.	Measurement Tape	1 No
9.	Hacksaw frame with Blade	1 No
10.	Rawl Jumper and bit No: 8	1 No
11.	Connector screw driver 100 mm	1 No
12.	Try square 200 mm	1 No

Materials required

Sl.No.	Name	Quantity
1.	3 Pin Socket 6A, 240 V	1
2.	Flush type switch	3
3.	Lamp 60 W	2
4.	1/18 copper Wire	20 Meter
5.	6 x 4 switch Box 1	1
6.	Silk wire	2 Meter
7.	Ceiling rose	2
8.	¾ inch Two way junction box	1

9.	¾ Three way junction box	1
10.	Pendent Holder	1
11.	¾ inch Wooden Screw	24
12.	1½ inch Wooden Screw	6
13.	¾ inch clamp	12
14.	PVC Tape Roll	1
15.	¾ inch P.V.C. Pipe	3 length

Line Diagram

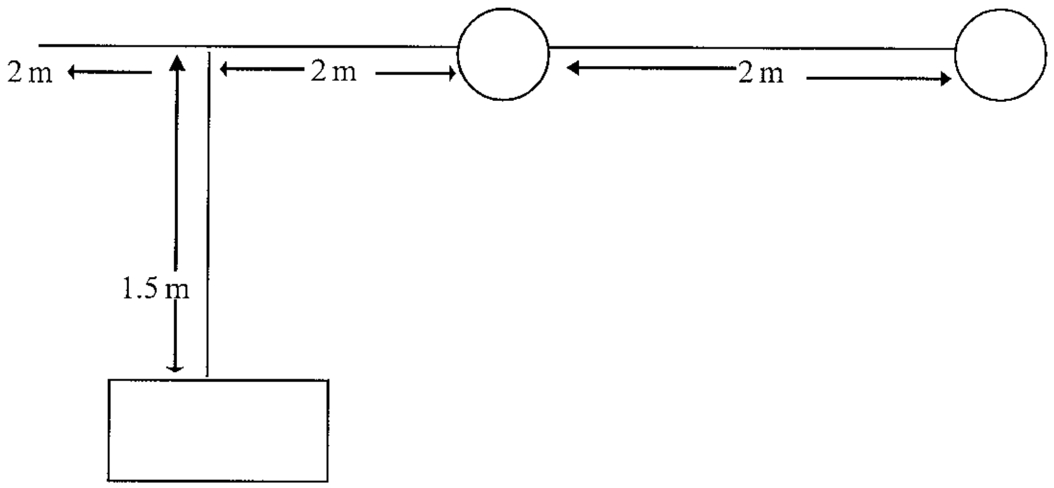

Connection Diagram

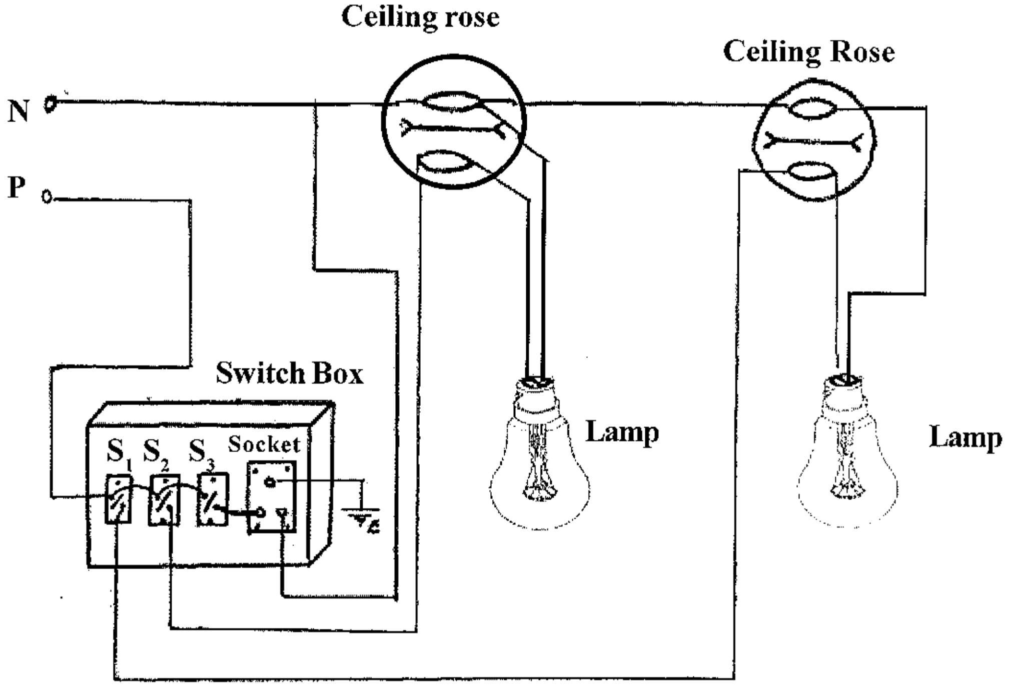

Procedure

1. Study layout diagram and the cable route, distance location of fitting and other accessories
2. Draw the wiring diagram for the given load as per the line diagram
3. List out the materials required for this wiring
4. Conform how to frame the PVC Pipe
5. Fix the PVC pipe by using clamps, junction box and switch box using wood screws.
6. Run the cable in the PVC pipe as per the wiring diagram
7. Connect the terminals of switch socket and ceiling rose as per the circuit diagram.
8. Connect the leads of pendent holder to ceiling rose by using flexible wire.
9. Fix the lamp in pendent holder
10. Give supply and check the circuit.

9. CONNECTION OF ONE LAMP, FAN WITH REGULARTOR AND THREE PIN SOCKET

Aim

Making connection of one lamp with switch control, fan with regulator and three pins socket with switch control.

Type of Wiring

P.V.C. Pipe Wiring

Tools Required

Sl.No.	Name	Quantity
1.	Hammer	1 No
2.	Screw Driver 200 mm	1 No
3.	Cutting Plier 150 mm	1 No
4.	Pocker 200 mm long	1 No
5.	Electrician Knife	1 No
6.	Tester	1 No
7.	Nose Plier	1 No
8.	Measurement Tape	1 No
9.	Hacksaw frame with Blade	1 No
10.	Rawl Jumper and bit No: 8	1 No
11.	Connector screw driver 100 mm	1 No
12.	Try square 200 mm	1 No
13.	Spanner set	1 No

Materials required

Sl.No.	Name	Quantity
1.	1/18 copper wire	20 meter
2.	Flush type switch (one way)	3
3.	Flexible wire	2 meter
4.	8" x 6" switch box	1
5.	Fan Regulator	1
6.	Three pin socket 6A, 240 V	1
7.	Lamp 60 W	1
8.	Ceiling rose	2
9.	Pendent Holder 6A, 240 V	1

10.	¾ inch PVC pipe	3 length
11.	¾ inch wood screw	40
12.	¾ inch Clamp	18
13.	one way junction box	1
14.	1½ inch wooden screw	6
15.	PVC insulation tape roll	1
16.	Two way junction box	1
17.	3 way junction Box	1
18.	Ceiling fan	1

Layout Diagram

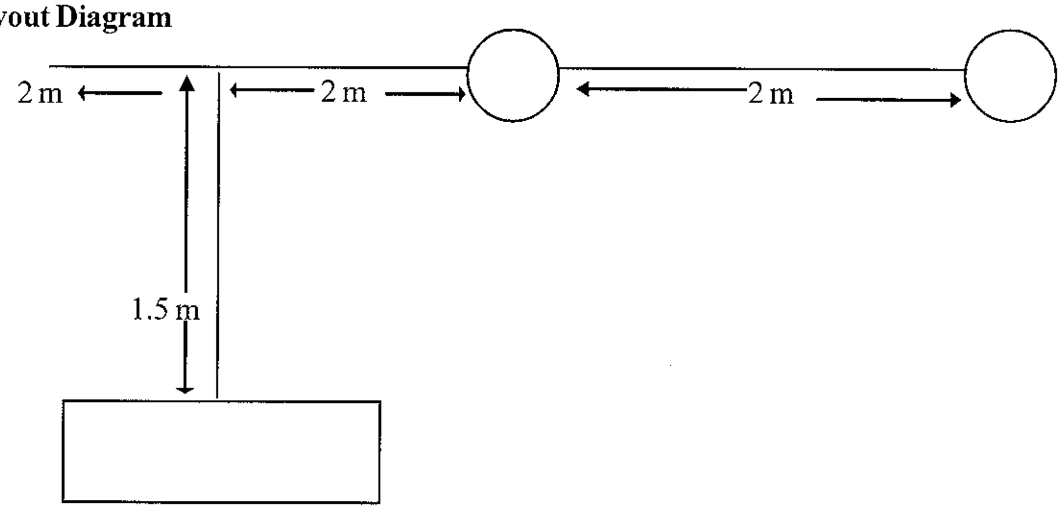

Connection Diagram

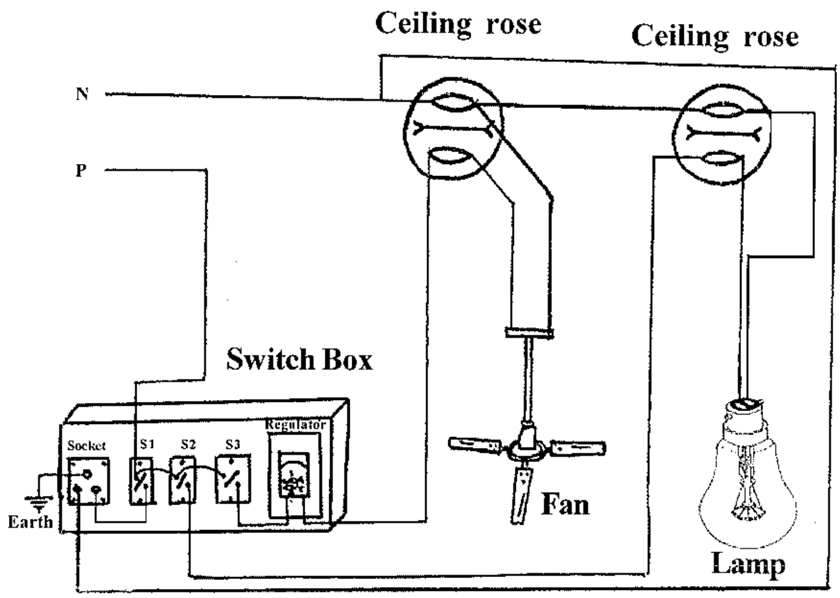

Procedure

1. Study layout diagram and the cable route, distance location of fitting and other accessories
2. Draw the wiring diagram for the given load as per the line diagram
3. List out the materials required for this wiring
4. Conform how to frame the PVC Pipe
5. Fix the PVC pipe by using clamps, junction box and switch box using wood screws.
6. Run the cable in the PVC pipe as per the wiring diagram
7. Connect the terminals of switch, regulator, socket and ceiling rose as per the circuit diagram.
8. Connect the leads of pendent holder to ceiling rose by using flexible wire and connect the Terminals of ceiling fan by using fluxible wire.
9. Fix the lamp in pendent holder
10. Give supply and check the circuit.

10. CONNECTION OF DIM AND BRIGHT METHOD USING TWO WAY SWITCH

Aim

To control two lamps by one two way switch, one lamp glow brightly at one positioni of switch and two lamps glow dim at another position of switch.

Type of Wiring

P.V.C. Pipe Wiring

Tools Required

Sl.No.	Name	Quantity
1.	Hammer	1 No
2.	Screw Driver 200 mm	1 No
3.	Cutting Plier 150 mm	1 No
4.	Pocker 200 mm long	1 No
5.	Electrician Knife	1 No
6.	Tester	1 No
7.	Nose Plier	1 No
8.	Measurement Tape	1 No
9.	Hacksaw frame with Blade	1 No
10.	Rawl Jumper and bit No: 8	1 No
11.	Connector screw driver 100 mm	1 No
12.	Try square 200 mm	1 No

Materials required

Sl.No.	Name	Quantity
1.	1/18 copper wire	20 meter
2.	PVC Pipe 3/4 inch	2 length
3.	Flexible wire	2 meter
4.	Ceiling rose	2
5.	3/4 inch Clamp	12
6.	Pendent Holder 6A, 240 V	2

7.	Lamp 60 W	2
8.	Ceiling rose	2
9.	3/4 inch wood screw	30
10.	1½ inch woods screw	6
11.	Two way junction box	1
12.	Three way junction box	1
13.	PVC insulation tape roll	1
14.	One way junction box	1

Layout Diagram

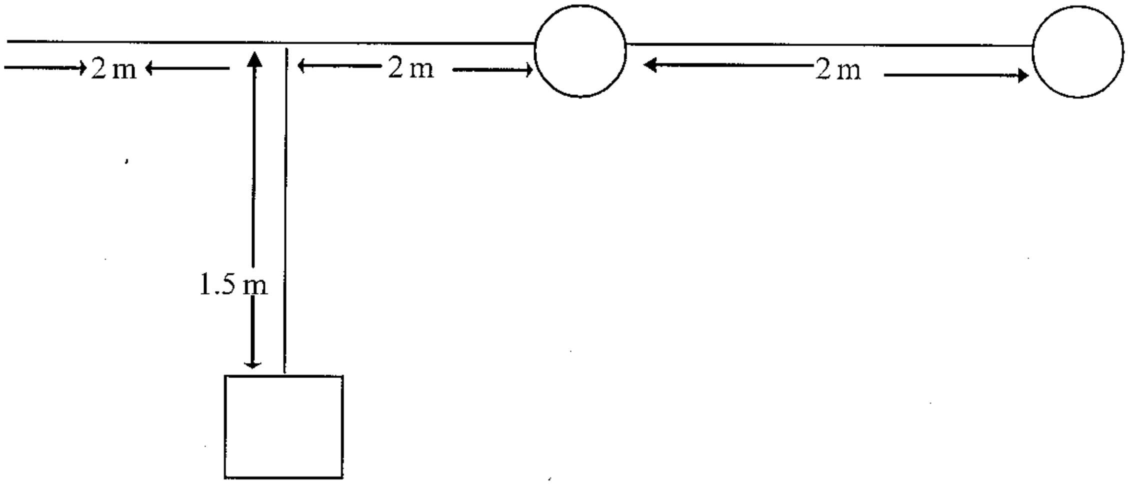

Connection Diagram (Dim and Bright)

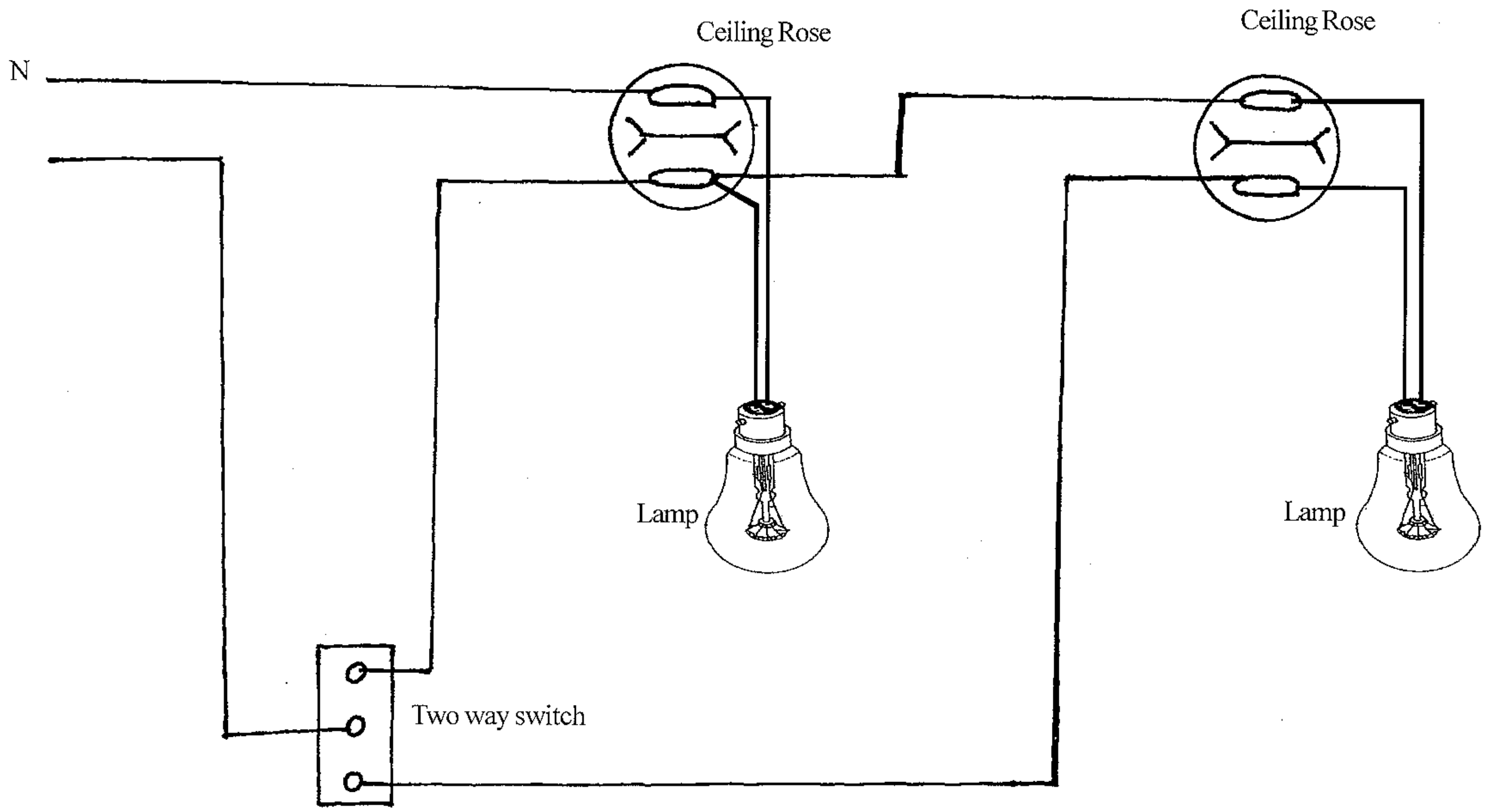

Procedure

1. Study layout diagram and the cable route, distance location of fitting and other accessories
2. Draw the wiring diagram for the given load as per the line diagram
3. List out the materials required for this wiring
4. Conform how to frame the PVC Pipe
5. Fix the PVC pipe by using clamps, junction box and switch box using wood screws.
6. Run the cable in the PVC pipe as per the wiring diagram
7. Connect the terminals of switch and ceiling rose as per the circuit diagram.
8. Connect the leads of pendent holder to ceiling rose by using flexible wire.
9. Fix the lamp in pendent holder
10. Give supply and check the circuit.

11. CONNECTION OF BRIGHT AND BRIGHT METHOD USING TWO WAY SWITCH

Aim

To control two lamps by one two way switch one lamp glow at one position of switch other other lamp glow at another position of two way switch.

Types of wiring

PVC pipe wiring

Tools Required

Sl.No.	Name	Quantity
1.	Hammer	1 No
2.	Screw Driver 200 mm	1 No
3.	Cutting Plier 150 mm	1 No
4.	Pocker 200 mm long	1 No
5.	Electrician Knife	1 No
6.	Tester	1 No
7.	Nose Plier	1 No
8.	Measurement Tape	1 No
9.	Hacksaw frame with Blade	1 No
10.	Rawl Jumper and bit No: 8	1 No
11.	Connector screw driver 100 mm	1 No
12.	Try square 200 mm	1 No

Materials required

Sl.No.	Name	Quantity
1.	1/18 copper wire	20 meter
2.	PVC Pipe 3/4 inch	2 length
3.	Flexible wire	2 meter
4.	Ceiling rose	2
5.	3/4 inch Clamp	12
6.	Pendent Holder 6A, 240 V	2
7.	Lamp 60 W	2

8.	Ceiling rose	2
9.	3/4 inch wood screw	30
10.	1½ inch woods screw	6
11.	Two way junction box	1
12.	Three way junction box	1
13.	PVC insulation tape roll	1
14.	One way junction box	1

Layout Diagram

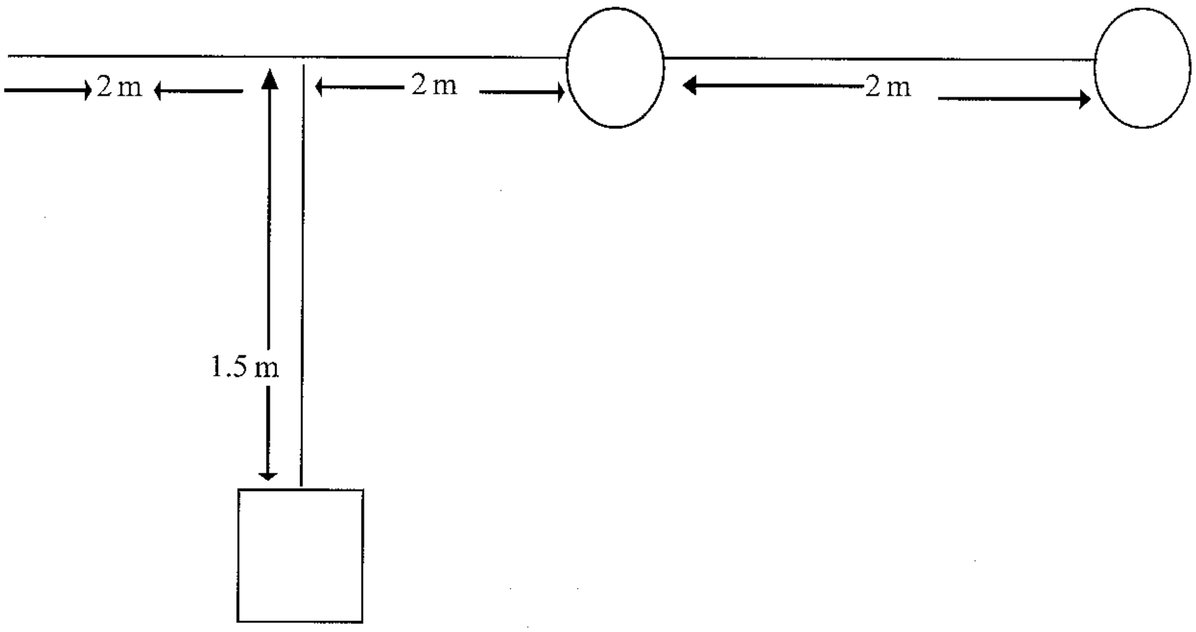

Connection Diagram (Bright and Bright)

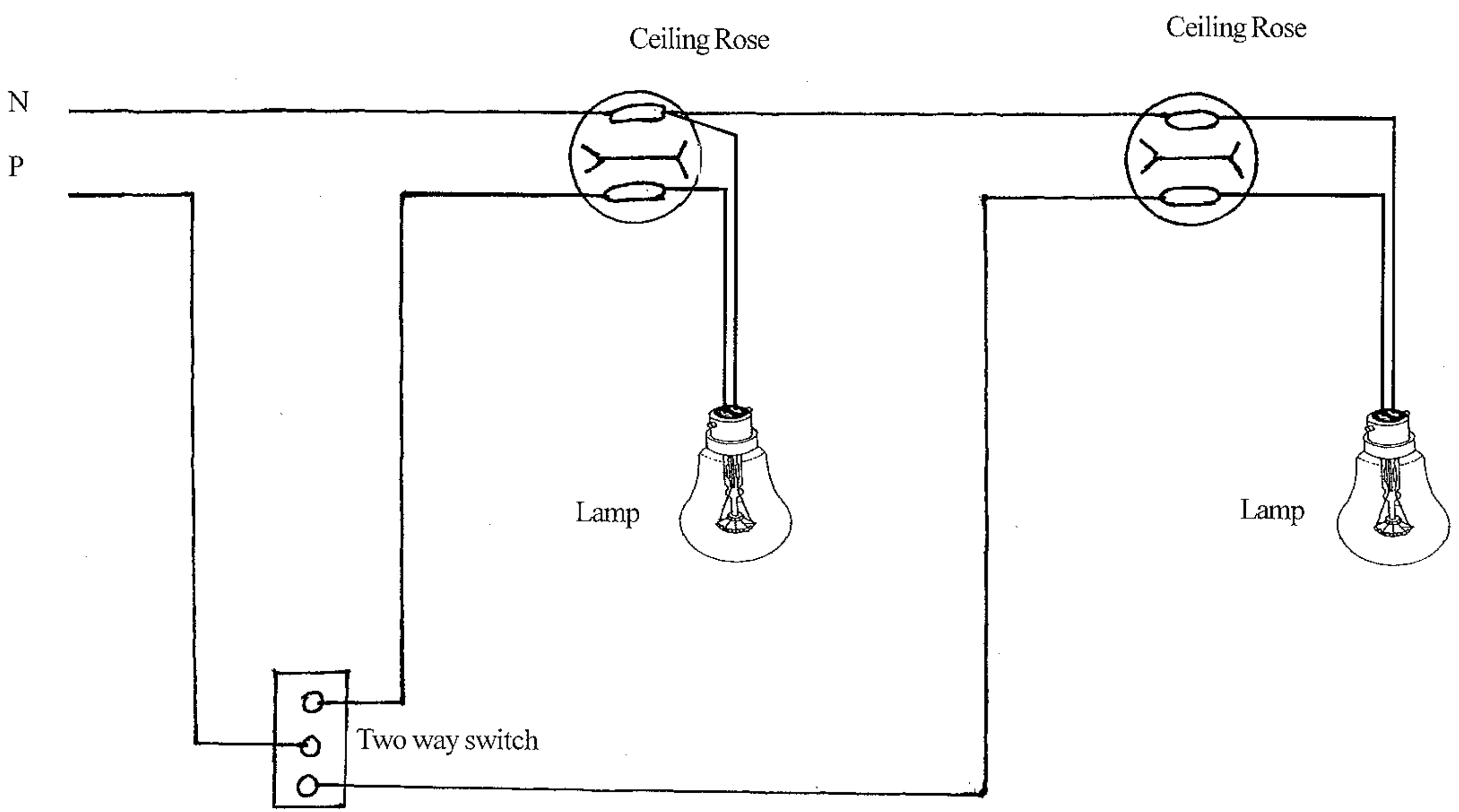

Procedure

1. Study layout diagram and the cable route, distance location of fitting and other accessories
2. Draw the wiring diagram for the given load as per the line diagram
3. List out the materials required for this wiring
4. Conform how to frame the PVC Pipe
5. Fix the PVC pipe by using clamps, junction box and switch box using wood screws.
6. Run the cable in the PVC pipe as per the wiring diagram
7. Connect the terminals of switch and ceiling roses as per the circuit diagram.
8. Connect the leads of pendent holders to ceiling roses by using flexible wire.
9. Fix the lamps in pendent holders.
10. Give supply and check the circuit.

12. CONNECTION OF FLUORESCENT LAMP AND TESTING

Aim

Wiring connection of single tube lamp and testing method of stock, starter, tube lamp.

Tools Required

S.No.	Name	Quantity
1.	Connecting Screw driver	1
2.	Electrician Knife	1
3.	Hacksaw frame with blade	1
4.	Cutting player	1
5.	Pocker	1
6.	Tester	1
7.	Screw Driver	1

Materials required

Sl.No.	Name	Quantity
1.	Tube lamp	40 Watts
2.	Frame (Fixer)	1
3.	Chock	1
4.	Tubelight starter	1
5.	Tube lamp holder	1 set
6.	Single Strand wire	5 Meter
7.	Test lamp with 100 watts pulb	1
8.	Test Board	1
9.	PVC Insuation Tape roll	1
10.	Wire Sleeve	10 cm length
11.	Condenser	1 No
12.	Starter holder	1

CONNECTION DIAGRAM (Tublelight Circuit)

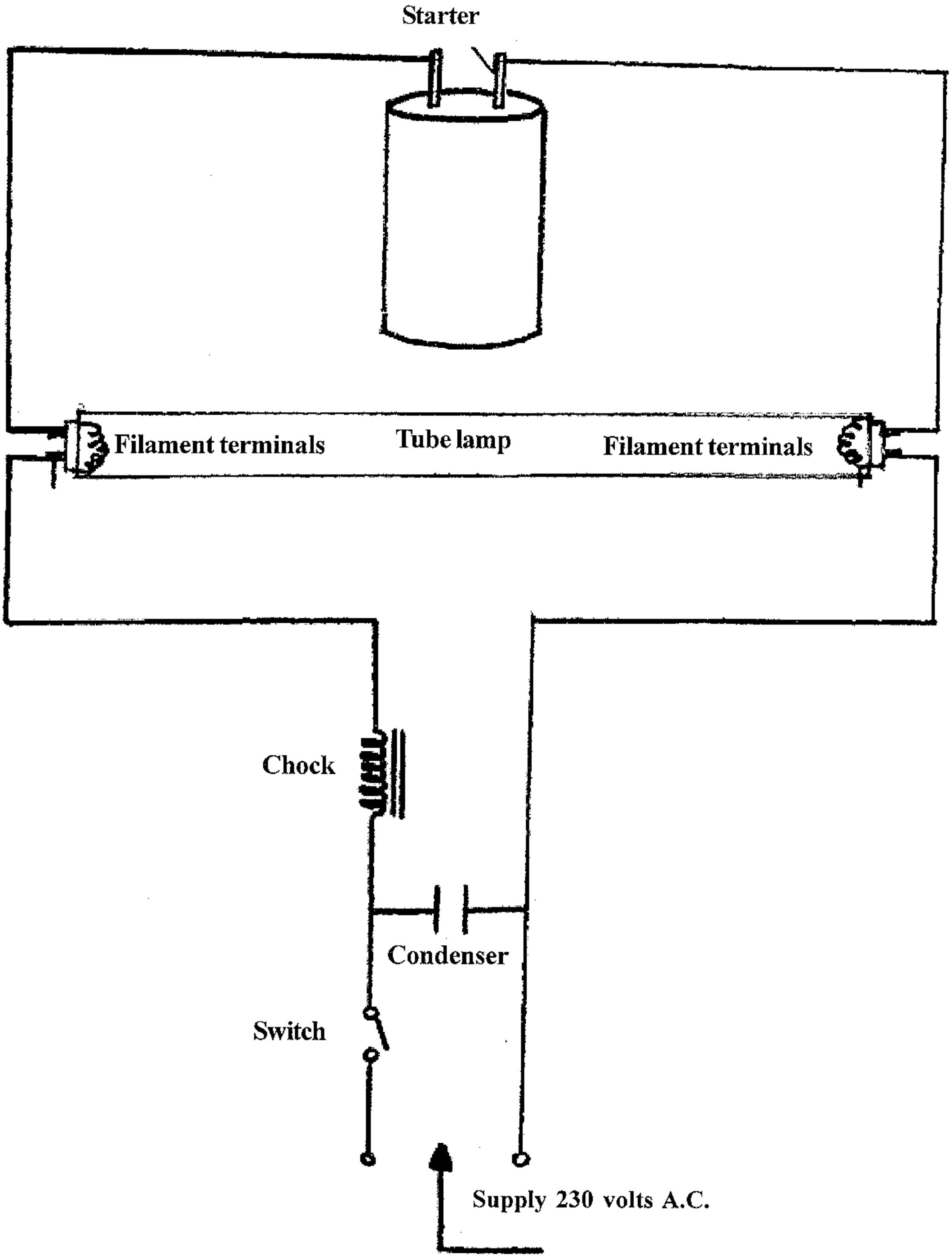

Procedure

1. Fix holders in a frame by screws.
2. Fix the starter in a frame.
3. Fix the chock with the frame by screws.
4. Connect electrical circuit as per the diagram.
5. Fix the tubelamp and starter.
6. Give the supply and check.

Test procedure

1. Connect chock inseries with test lamp and give the supply.
2. Connect the starter in series with test lamp and give the supply.
3. Connect ohm meter with the tube lamp terminal and check the continuity of flement.

Testing method of Choke

Give the supply as per the above connection diagram (ie. choke is connected inseries with test lamp)

1. If the test lamp glow with dim. The choke is in good conditions.
2. If the test lamp cannot glow the choke is open circuit.
3. If the test lamp glow brightly the choke is short circuited.

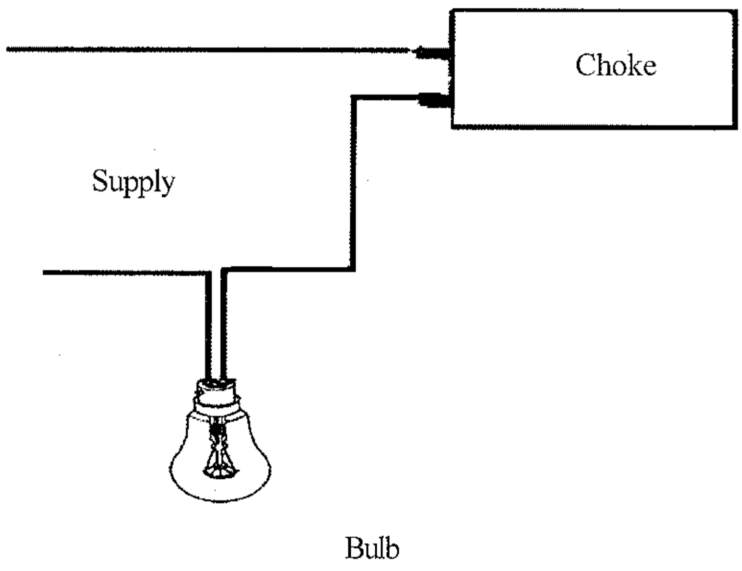

Testing method of starter

Give the supply as per the above diagram (ie. the starter is connected in series with the test lamp).

1. If the test lamp is glow with flikkering. The starter is in good condition.
2. If the test lamp is not glow starter is fault.

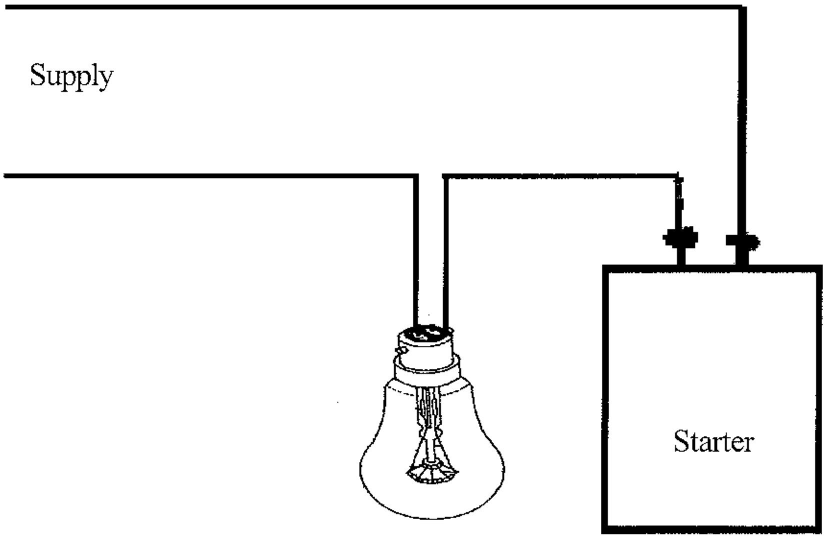

Testing method of tubelight

Connect ohm meter terminals with the each side of the terminal of tubelight. If ohm meter is shown zero position tube lamp is fused.

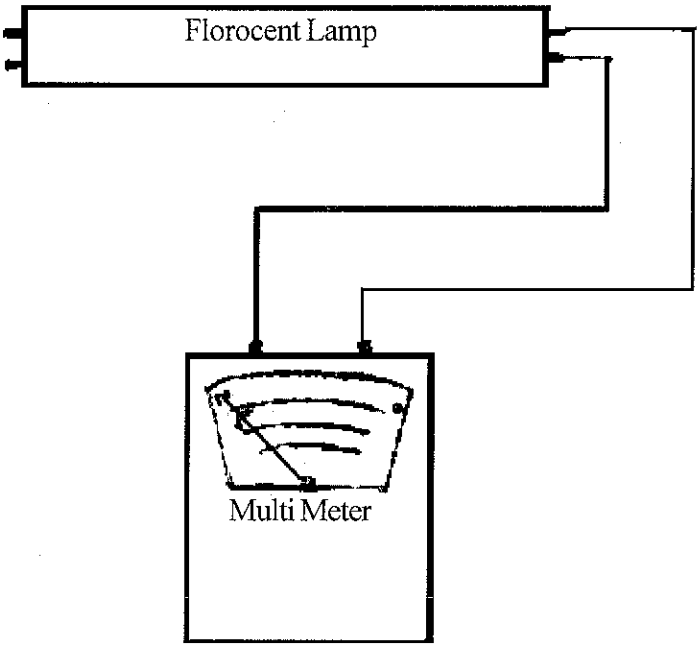

13. CONNECTION OF APPLIANCES TEST BOARD

Aim

Learn to prepare an appliances test board.

Tools Required

S.No.	Name	Quantity	
1.	Connecting Screw driver	1	
2.	Electrician Knife	1	
3.	Hacksaw frame with blade	1	
4.	Cutting pliyer	1	
5.	Pocker	1	
6.	Tester	1	
7.	Screw Driver	1	
8.	Hand drilling machine	1	
9.	Ball peen Hammer	1	

Materials required

Sl.No.	Name	Quantity
1.	12 x 18 wooden Board	1
2.	Fuse unit 16 amps, 240 volt	1
3.	Indicating lamp	1
4.	Straight pendent holder	1
5.	Oneway switch	2
6.	Multipin socket	1
7.	Ammeter0-6 amps	1
8.	Volt Meter 0-300 volt	1
9.	Lamp 100 watts	1
10.	Three pin plug	1
11.	1/18 copper wire	3 meters
12.	Three core power card	5 meters

Connection Diagram

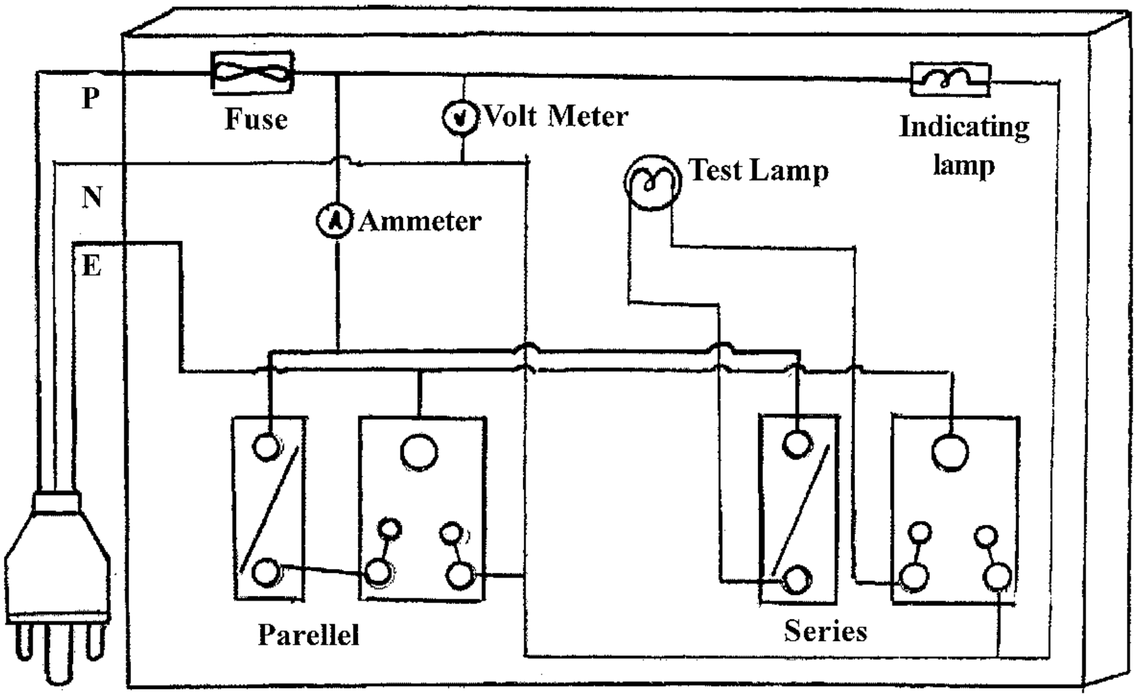

Procedure

1. Provide holds in the wooden board as per the above diagram.
2. Fix the switches, socket fuse indicator ammeter and volt meter properly.
3. Give connection to all the accessories as per the above connection diagram.
4. Connect the power card properly.
5. Give the supply and check the test board.

14. CONNECTION DIAGRAM OF GODOWN WIRING

Aim

Practice for godown wiring

Tools Required

S.No.	Name	Quantity
1.	Hammer	1 No
2.	Screw Driver 200 mm	1 No
3.	Cutting Plier 150 mm	1 No
4.	Pocker 200 mm long	1 No
5.	Electrician Knife	1 No
6.	Tester	1 No
7.	Nose Plier	1 No
8.	Measurement Tape	1 No
9.	Hacksaw frame with Blade	1 No
10.	Rawl Jumper and bit No: 8	1 No
11.	Connector screw driver 100 mm	1 No
12.	Try square 200 mm	1 No

Materials required

Sl.No.	Name	Quantity
1.	¾ inch PVC pipe	3 lengh
2.	1/8 copper wire	30 meter
3.	One way switch	2
4.	Two way Switch	2
5.	Pendent Holder	3
6.	lamp 100 watts	3
7.	¾ inch wood screw	1 Box
8.	¾ inch 'T' joint	4
9.	Ceiling box	3

10.	Switch box 3 x 4	4
11.	¾ inch lamp	30
12.	Rowl plug	1 box
13.	1½ inch wooden screw	12
14.	PVC insulation tape roll	1
15.	Silk wire	3 meter

Layout Diagram

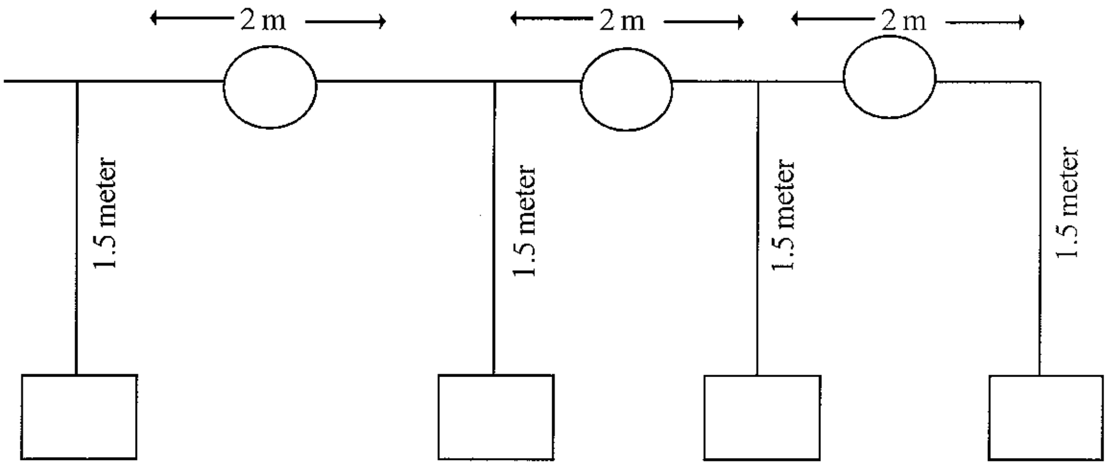

Connection Diagram

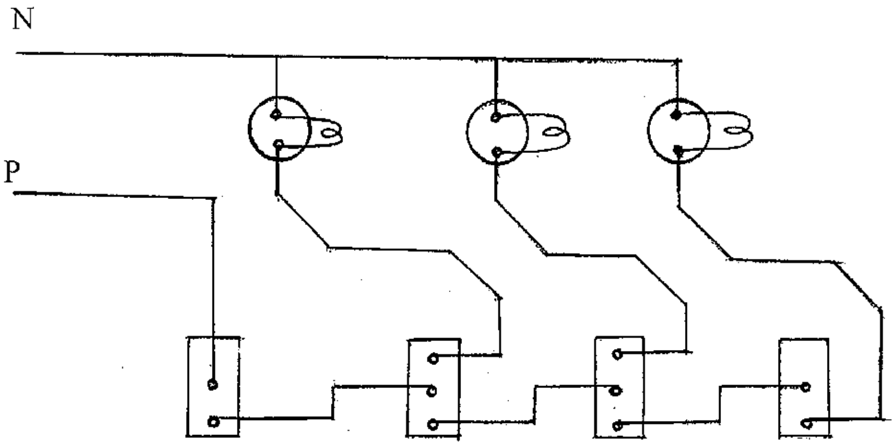

Procedure

1. Study line diagram and the cable route, distance location of fitting and other accessories
2. Draw the wiring diagram for the given load as per the line diagram
3. List out the materials required for this wiring
4. Conform how to frame the PVC Pipe
5. Fix the PVC pipe by using clamps, junction box and switch box using wood screws.
6. Run the cable in the PVC pipe as per the wiring diagram
7. Connect the terminals of switches and ceiling roses as per the circuit diagram.
8. Connect the leads of pendent holders to ceiling roses by using flexible wire.
9. Fix the lamp in pendent holders.
10. Give supply and check the circuit.

15. EXTENSION POWER CARD

Aim

Learn to prepare an extension power card.

Tools Required

S.No.	Name Quantity	
1.	Hammer	1 No
2.	Screw Driver 200 mm	1 No
3.	Cutting Plier 150 mm	1 No
4.	Pocker 200 mm long	1 No
5.	Electrician Knife	1 No
6.	Tester	1 No
7.	Nose Plier	1 No
8.	Measurement Tape	1 No
9.	Hacksaw frame with Blade	1 No
10.	Rawl Jumper and bit No: 8	1 No
11.	Connector screw driver 100 mm	1 No
12.	Try square 200 mm	1 No
13.	Hand Drilling machine	1 No

Materials required

Sl.No.	Name	Quantity
1.	12 x 10 wooden box	1
2.	Fuse unit 16 amps, 240 volt	1
3.	5 pin socket 6 amps, 240 volt	3
4.	One way switch	3
5.	Three pin plug	1
6.	Indicating lamp	1
7.	1/18 copper wire	5 meter
8.	3 core cable	5 meter

Connection diagram (Extension power card)

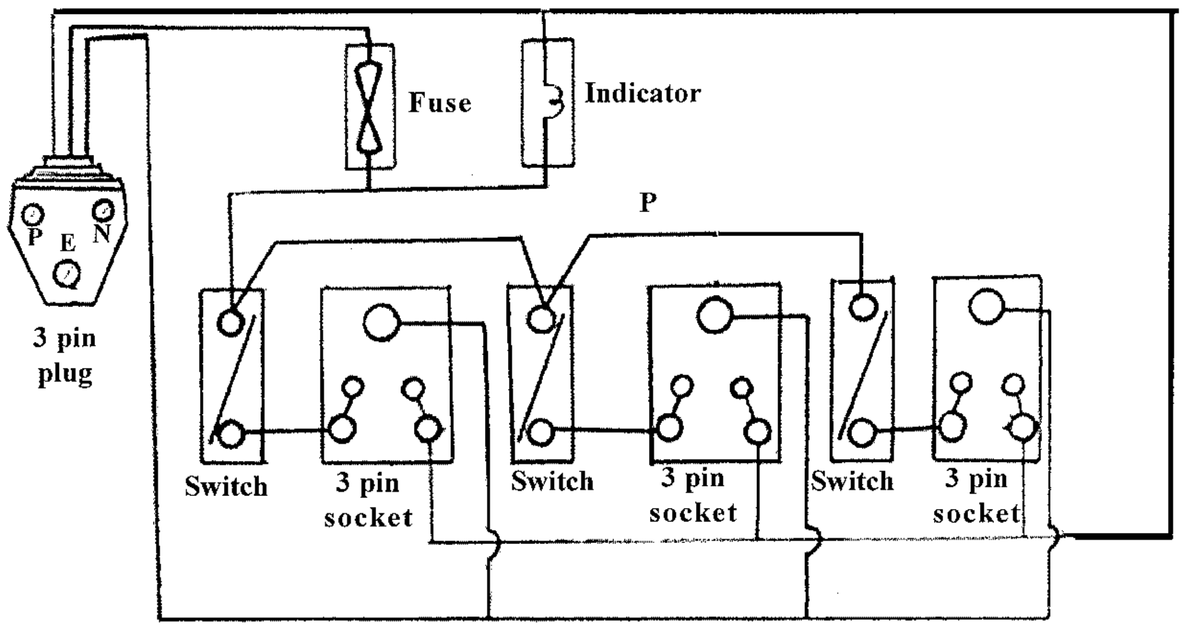

Procedure

1. Provide holds in the wooden board as per the above diagram.
2. Fix the switches, socket, fuse and indicator
3. Give connection all the accessories as per the above connection diagram.
4. Connect the power card properly.
5. Give the supply and check the test board.

16. VERIFICATION OF OHM'S LAW

AIM

To determine the resistance of two given coils of wire using Ohm's Law.

Apparatus required

A battery, plug key, Rheostat, Resistance R_1 & R_2, Voltmeter, Ammeter, connecting wires etc.

Procedure

1. Any one of the given tow coils is connected as shown in the circuit diagram.
2. After checking the connections, the plug key is closed.
3. The rheostat is adjusted for suitable currents and the corresponding voltmeter readings are noted, the readings are tabulated.
4. Now form the formula $R_1 = V/I$, the value of the resistance is determined.
5. Similarly, the experiment is repeated with second coil R2 and the value of the resistance R2 can be determines.

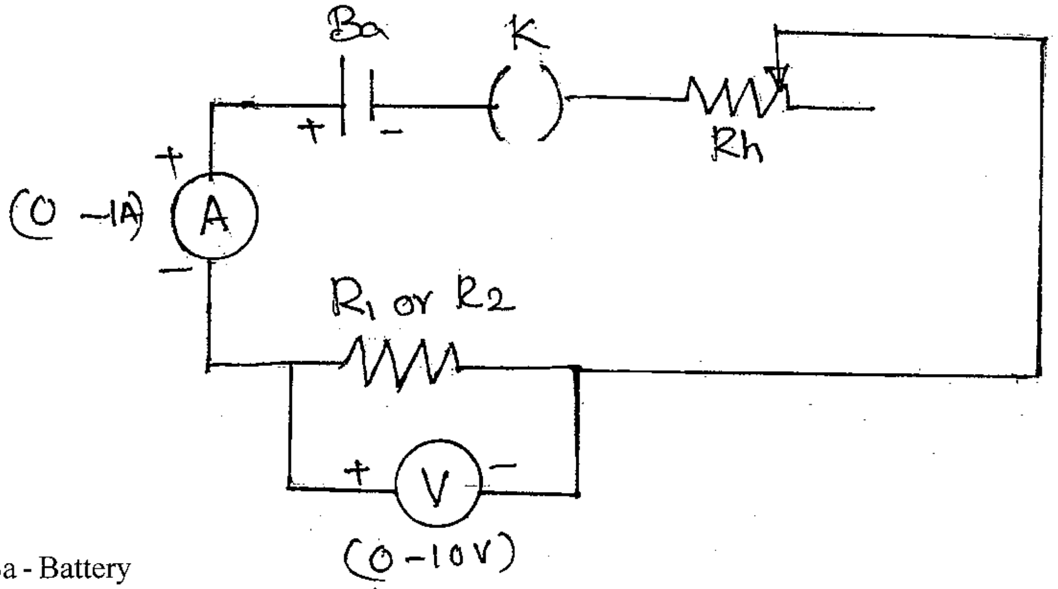

Ba - Battery

K - Key

V - Voltmeter

A - Ammeter

R_1R_2 - Resistance

R_h - Rheastat

To Find R_1

Sl.No.	Ammeter Reading 'I' in ampere	Volt meter Reading in 'V' volts	Resistance $R_1 = V/I$ Ohms
1.			
2.			
3.			
4.			
5.			

Mean R_1 = ____________________

To Find R_2

Sl.No.	Ammeter Reading 'I' in ampere	Volt meter Reading in 'V' volts	Resistance $R_1 = V/I$ Ohms
1.			
2.			
3.			
4.			
5.			

RESULT

The resistance of two coils of wire R_1 = ______________ohm

R_2 = _______________ ohm.

17. VERIFICATION OF KIRCHOFF'S VOLTAGE AND CURRENT LAW

AIM

To verify Kirchoff's voltage and current law.

Apparatus required

S.No.	Description	Range	Quantity
1.	Regulated power supply	5V	1
2.	Bread Board	-	1
3.	Resistor	1K	3
4.	Resistor	3.3K	1
5.	Ammeter	(0-50)MA	2
6.	Voltmeter	(0-10)V	2
7.	Connecting wires	-	-

Theory

a.Current law

In any electrical network, the algebraie sum of current meeting at a point is zero.

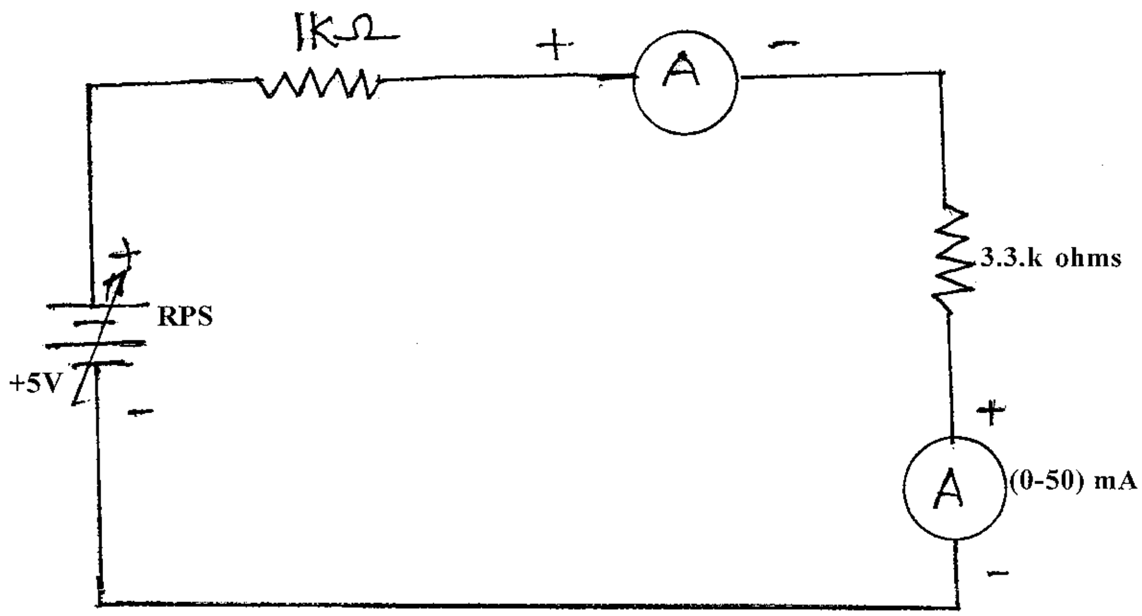

Circuit Diagram (KCL)

Tabular Coloum

S.No.	RPS	I1 (MA)	I2(MA)	I1 + I2 (MA)
1	0.8	0.12	0.12	0.25
2.	1.0	0.22	0.22	0.44
3.	1.5	0.34	0.34	0.68
4.	2.0	0.46	0.46	0.92
5.	2.5	0.58	0.58	11.6
6.	3.0	0.70	0.70	1.4
7.	3.5	0.81	0.81	1.62
8.	4.0	0.94	0.94	1.8

b. Voltage law

In any closed circuit the algebraie sums of all the emfs and voltage drops in all the resistance is equal to zero.

Procedure

- make the connections as per the circuit diagram
- switch "ON" the power supply (+5V)
- measure and recorder I_1, I_2 and I_3 reading in the table.
- Verify the Kirchoff's current law as $I_1 = I_2 + I_3$.
- Repeat the above procedures of 3 and 4 for changing the value of resistor as mentioned in the Tabular Column.
- Switch "OFF" the power supply
- Disconnect the components.

Circuit Diagram (KVL)

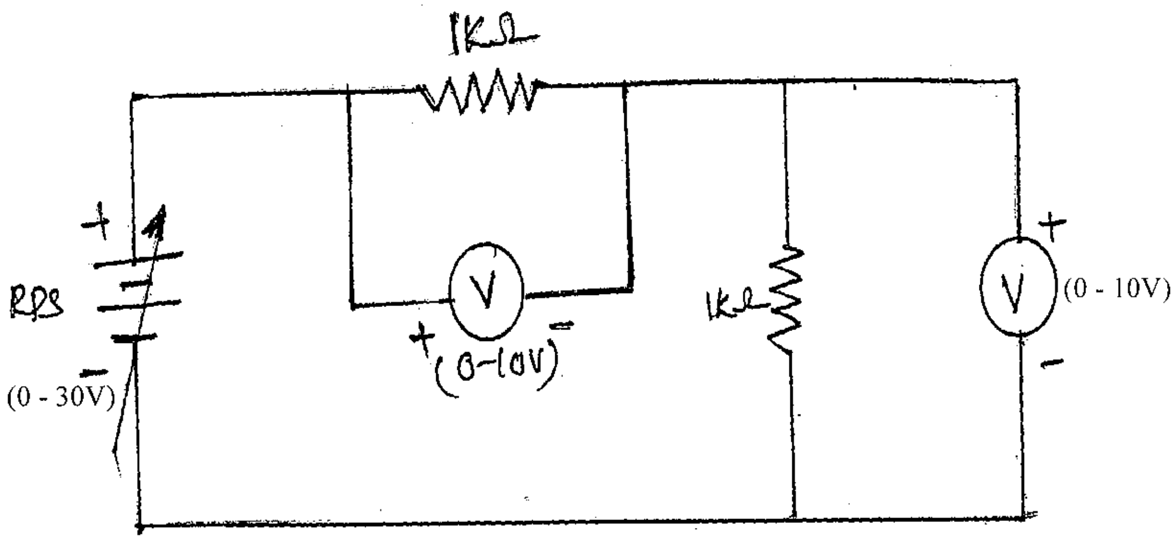

Tabular Coloum

S.No.	RPS	V_1(Volt)	V_2 (Volt)	$V_1 + V_2$
1.	0.5	0.2	0.2	0.4
2.	1.0	0.5	0.5	1.0
3.	1.5	0.7	0.7	1.4
4.	2.0	0.9	0.9	1.8
5.	2.5	1.5	1.5	3.0
6.	3.0	1.7	1.7	3.4
7.	3.5	1.9	1.9	3.8

8. 4.0

Result

The KCL & KVL are verified and found correct.

18. MEASUREMENT OF POWER AND POWER FACTOR IN SINGLE PHASE CIRCUIT

AIM

To measure the power and power factor of a given single phase circuit.

Apparatus required

S.No.	Name of apparatus	Range	Type	Qty
1.	Ammeter	(0-10)A	MI	1
2.	Voltmeter	(0-300)V	MI	1
3.	Wattmeter	10A,300V	OPF	1
4.	Single Phase load	10A, 230V	Resistance Load	1
5.	Connecting wires	-	-	10

Procedure

i) Make the connections as per the circuit diagram

ii) Switch on the supply

iii) Vary the load in step by step. In each step, note the ammeter, voltameter and wattmeter readings

Circuit Diagram

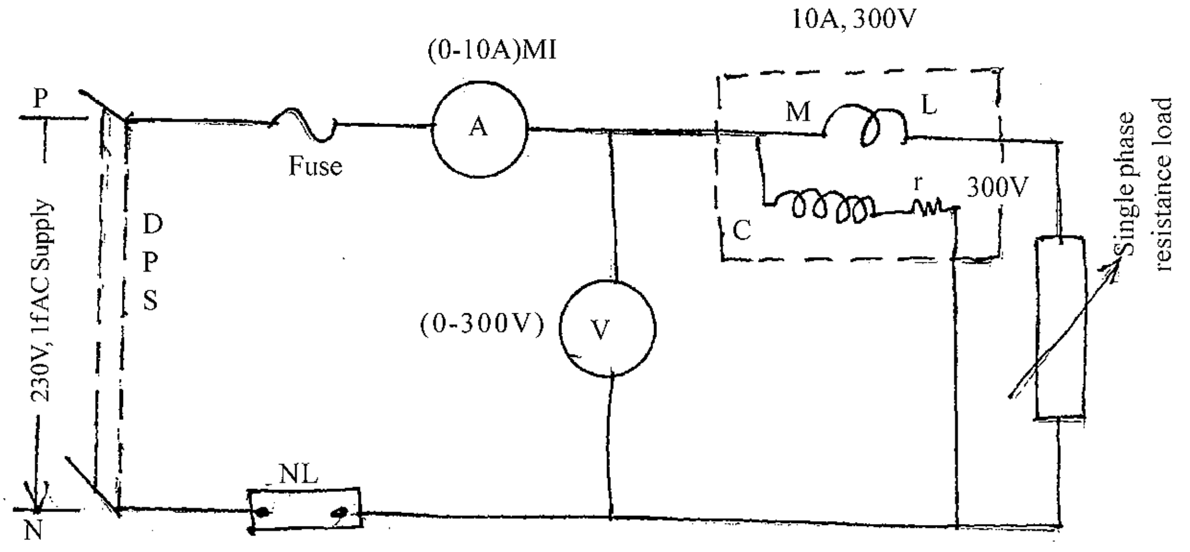

Observation

S.No	Voltage (V) (Volts)	Current (I) (Amps)	Power (W) (watts)	$W_S = V \times I$ Watts	Power factor $\cos\theta = W/V \times I$	Error $\frac{W_S - W_N}{WN}$

Model Calculation:

Voltage (V) = Volts

Current (I) = Amps

Non standard Watt meter Reading W_N = Watts

Standard Watt meter Reasing W_S = V x I......... Watts

Power factor (COSθ) = W/V x I

iv) Then release the load and switch off the supply.

Multiplication factor of Wattmeter = $\frac{\text{Current coil rating x voltage coil rating}}{\text{Full scale Reading}}$

Result

Thus the measure of the power and power factor of a given single phase circuit.

P = V x I

$$\text{Error} = \frac{W_S - W_N}{W_N} \times 100$$

19. CALIBRATION OF SINGLE PHASE ENERGY METER

AIM

To calibrate the given single phase energy meter with standard watt meter and a stop watch.

Apparatus required

S.No.	Name of apparatus	Range	Type	Qty
1.	Ammeter	(0-300)V	MI	1
2.	Voltmeter	(0-10A)	MI	1
3.	Wattmeter	10A,300V	Dynamo meter	1
4.	Energy Meter	10A, 250V	Induction	1
5.	Resistance Load	10A, 250V	-	1

Precaution

At the time of starting the experiment, the load switch must be kept in open position.

Procedure

1. Give the connection as per the circuit diagram.
2. Switch "ON" the supply and note down reading of the meter.
3. To adjust the load to rated current and note down the reading of the meters.
4. Tabulate the reading and calculate the percentage error.

Circuit Diagram

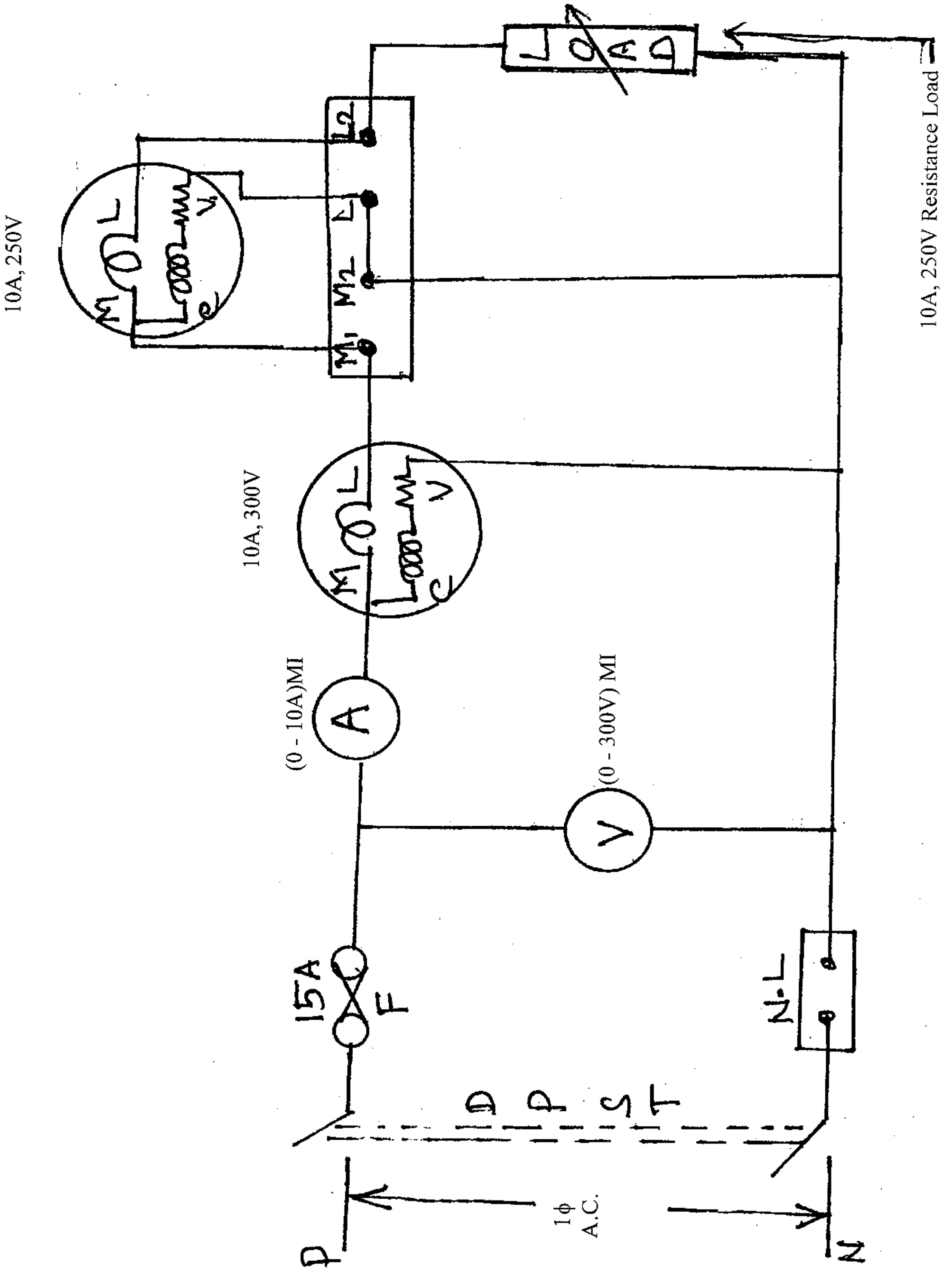

Tabulation

S.No.	V volts	I amp.	W1 Watts	Time in sec	Recorded energy	True energy	% Error = $\frac{RE - TE}{TE} \times 100$
1.							
2.							
3.							
4.							
5.							

Model Calculation

Recorded energy = $\frac{\text{No. of revolutions}}{\text{Meter constant}}$

True Energy = $\frac{W \times T}{3600 \times 1000}$

Multiplication of Watt meter = $\frac{\text{Current coil Rating} \times \text{Voltage Coil rating}}{\text{Full Scale reading}}$

% Error = $\frac{RE - TE}{TE} \times 100$

Result

Thus the given single phase energy meter was calibrated with the ammeter, voltmeter, wattmeter and a stop watch and the graph was plotted.

Graph

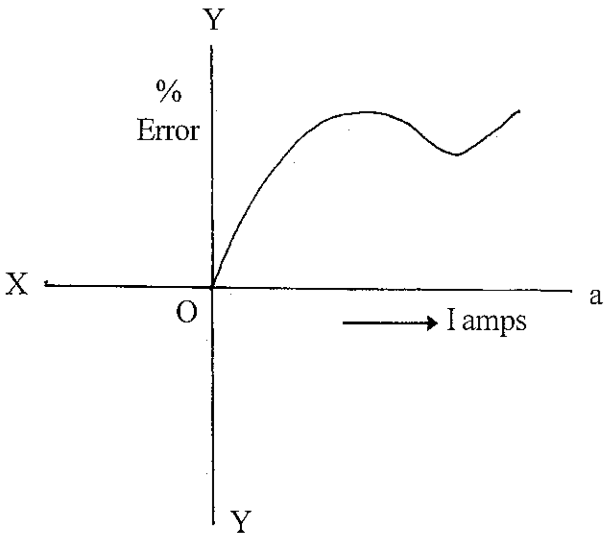

20. STUDY OF EARTHING

Rod and pipe electrodes

These electrodes shall be made of metal rod or pipe having a clean surface not covered by paint, enamel or other poorly conducting material.

Rod electrodes of steel or galvanised iron shall be at least 16 mm in diameter, and those of copper shall be at least 12.5 mm in diameter.

Pipe electrodes shall not be smaller than 38 mm internal diameter, if made of galvanised iron or steel, and 100 mm internal diameter if made of cast iron.

Electrodes shall, as far as practicable, be embedded in earth below the oermanent moisture level

The length of the rod and pipe electrodes shall not be less than 2.5 m.

Except where rock is encountered, pipes and rods shall be driven to a depth of atleast 2.5 m. Where rock is encountered at a depth of less than 2.5 m, the electrodes may be buried, inclined to the vertical. In this case too, the length of the electrodes shall be atleast 2.5 m, and the inclination not more than 30° from the vertical.

Deeply driven pipes and rods are, however, effective where the soil resistivity decreases with depth or where a sub-stratum of low resistivity occurs at a depth greater than those to which rods and pipes are normally driven.

Pipes or rods, as far as possible, shali be of one piece.

For deeply driven rods, joints between sections shall be made by means of a screwed coupling.which should not be of a greater diameter than that of-the rods which it connects together.

Plate electrodes :

Plate electrodes.when made of galvanised iron or steel,shall not be less than 6.3 mm in thickness. Plate electrodes of copper shall be not less than 3.15 mm in thickness. Plate electrodes shall be of a size, at least 60 cm by 60 cm.

Plate electrodes shall be buried such that the top edge isat a depth not less than 1.5 m from the surface of the ground.

Where the resistance of one plate electrode is higherthan the required value, two or more plates shall be used in parallel. In such a case, the two plates shall be separated from each other by not less than 8.0 m.

Plates shall preferably be set vertically.

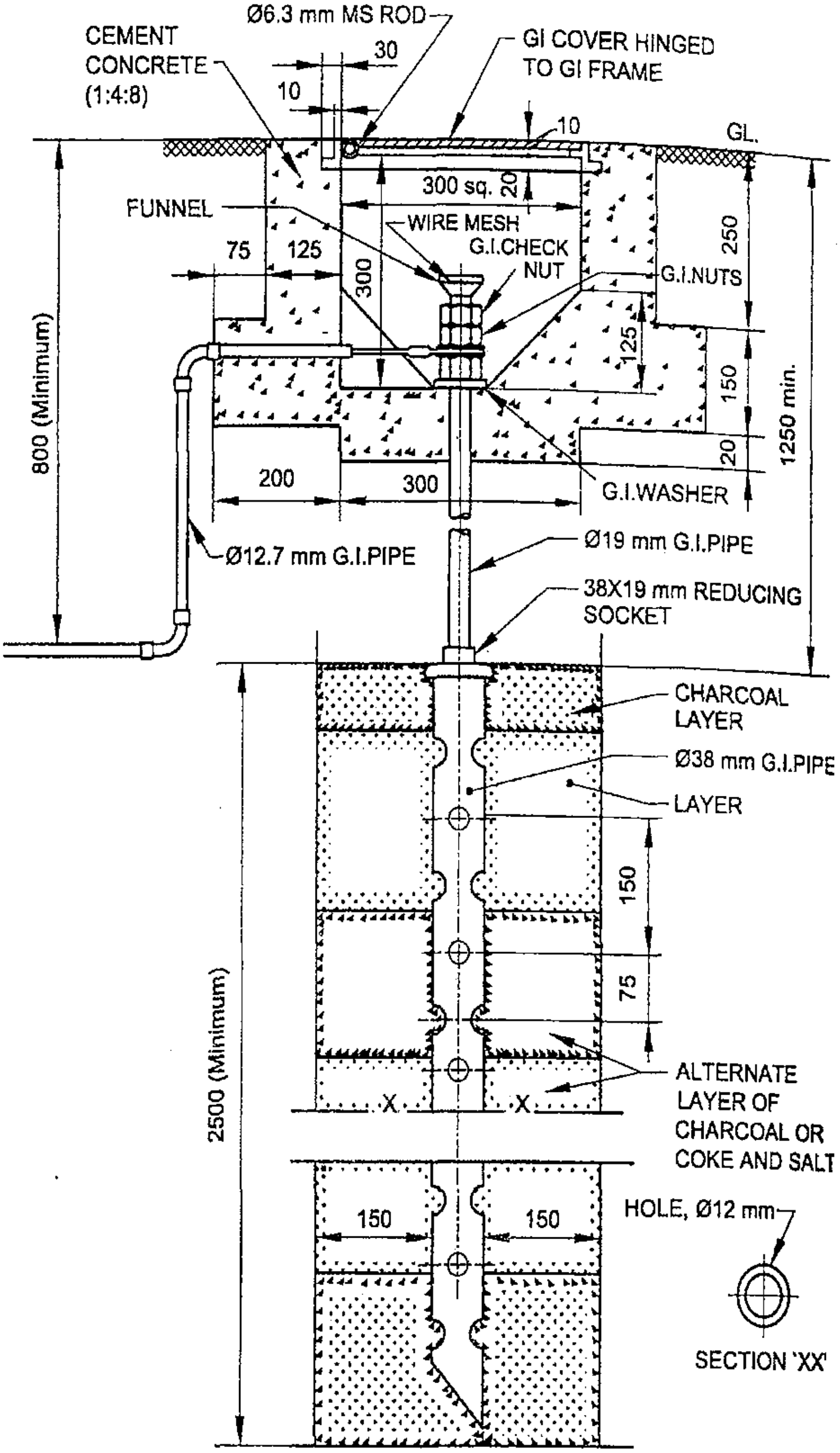

PIPE EARTHING

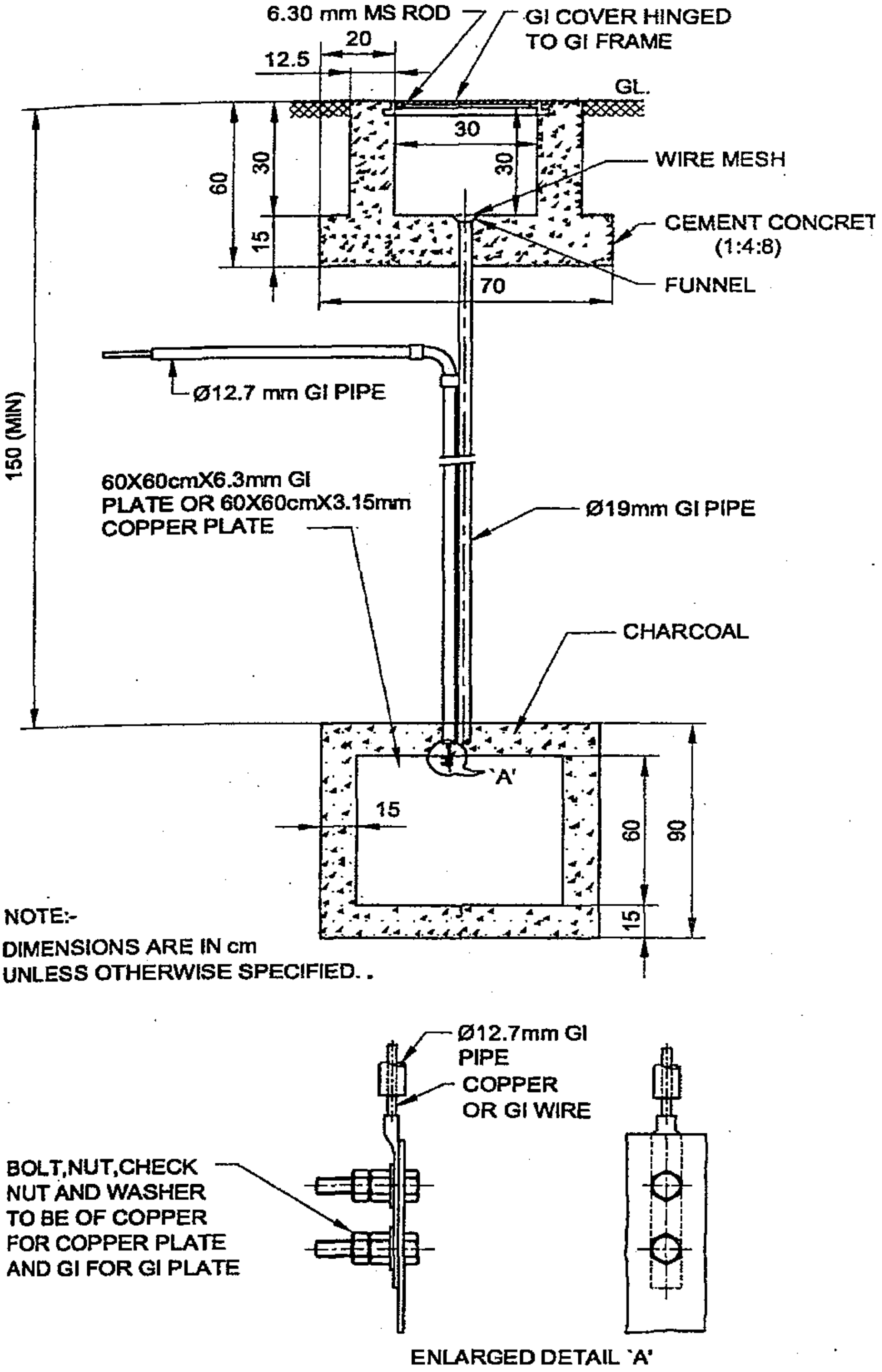

PLATE EARTHING